# *PSIP Maintenance



* Customers can put some grease on pivot points(red circle place), with brass or gunmetal bushings.







* Let's maintain your machine!

# PSIP HARDWARE

(shown in actual size)

A[1PCS]

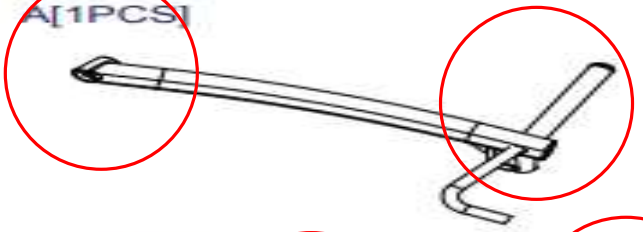

B[1PCS]

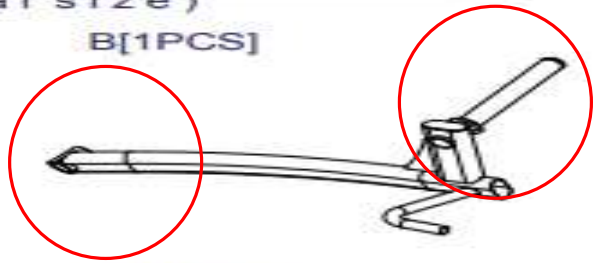

C[1PCS]

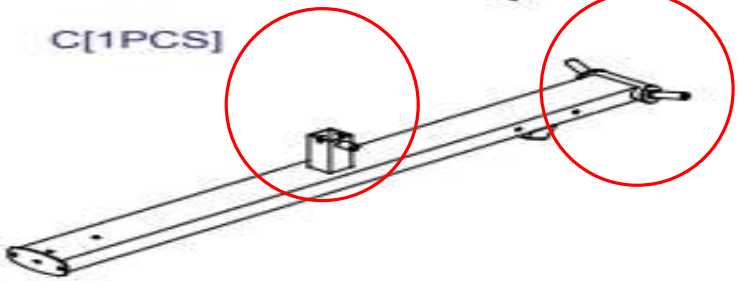

D[2PCS]



E[1PCS]

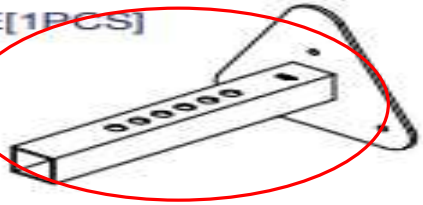

F[2PCS]



G[1PCS]



H[1PCS]

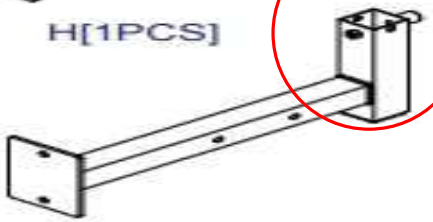

I[1PCS]



J[1PCS]



# PSIP HARDWARE
(shown in actual size)

K[4PCS]
(6730-011)



L(4PCS)
8313-235



M(2PCS)
8312-091



N(1PCS)
8313-250



O(1PCS)
9111-105

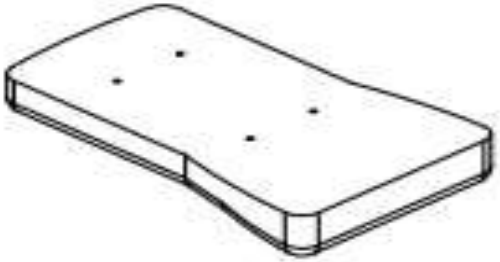

P(1PCS)
9121-116



# PSIP HARDWARE

(shown in actual size)

D1.Rubber Insert (9310-076)..... [5PCS]
D2.Block Rubber (9310-077)..... [2PCS]
D3.Rubber Dount (9310-016)..... [6PCS]
D4.Elliptical Pipe Plug(9211-193)..... [2PCS]
D5.Round Plug(9211-020)..... [2PCS]
D6.Spring Clip(OC06) ..... [2PCS]
D7.End Cap(8130-131)..... [2PCS]
D9.Double Set Of(9211-047)..... [2PCS]
D10.Bearing (8510-037) (pre-installed)..... [4PCS]
D11.Chrome collar (8130-287) (pre-installed)..... [2PCS]
D12.Impregnated With Handle (9162-208)(pre-installed)..... [2PCS]
D13.Chrome collar (8890-048) (pre-installed)..... [2PCS]
D14.Pop Pin (8250-065G) (pre-installed)..... [2PCS]

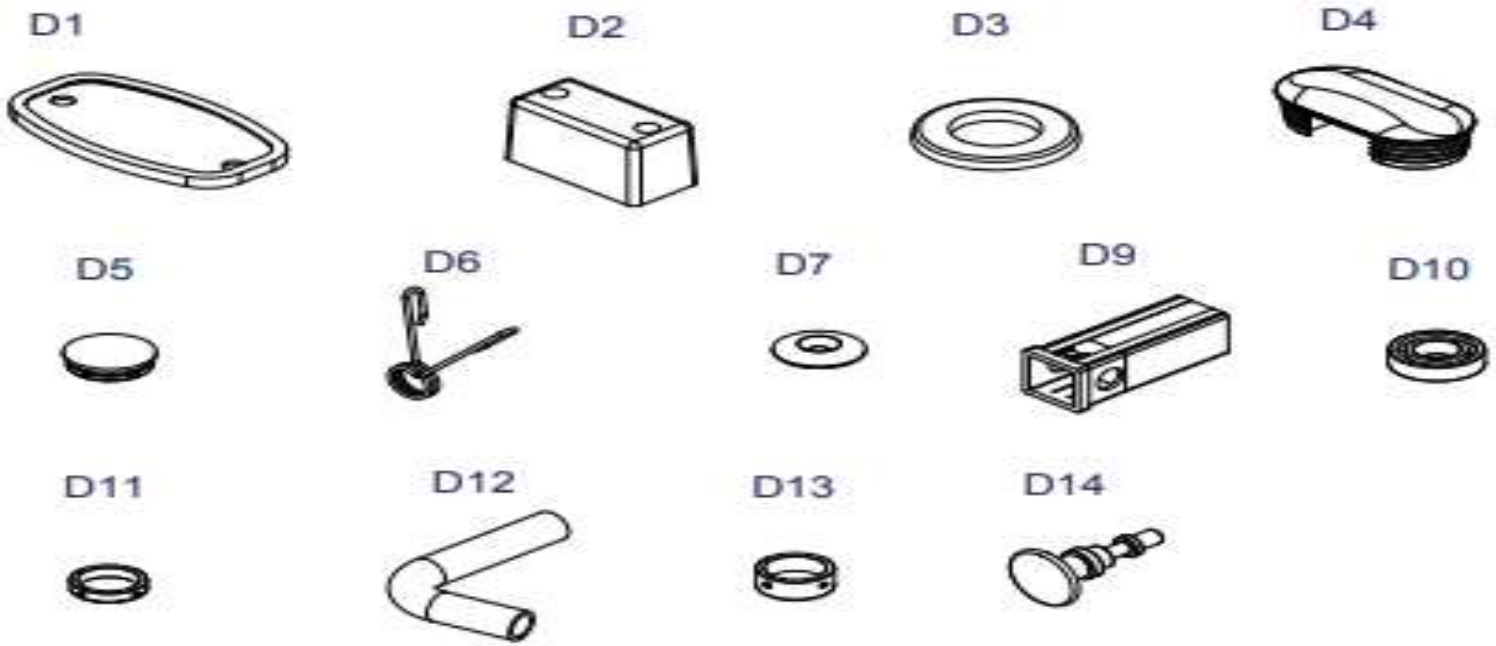

Above shows STEP 1
assembled and completed

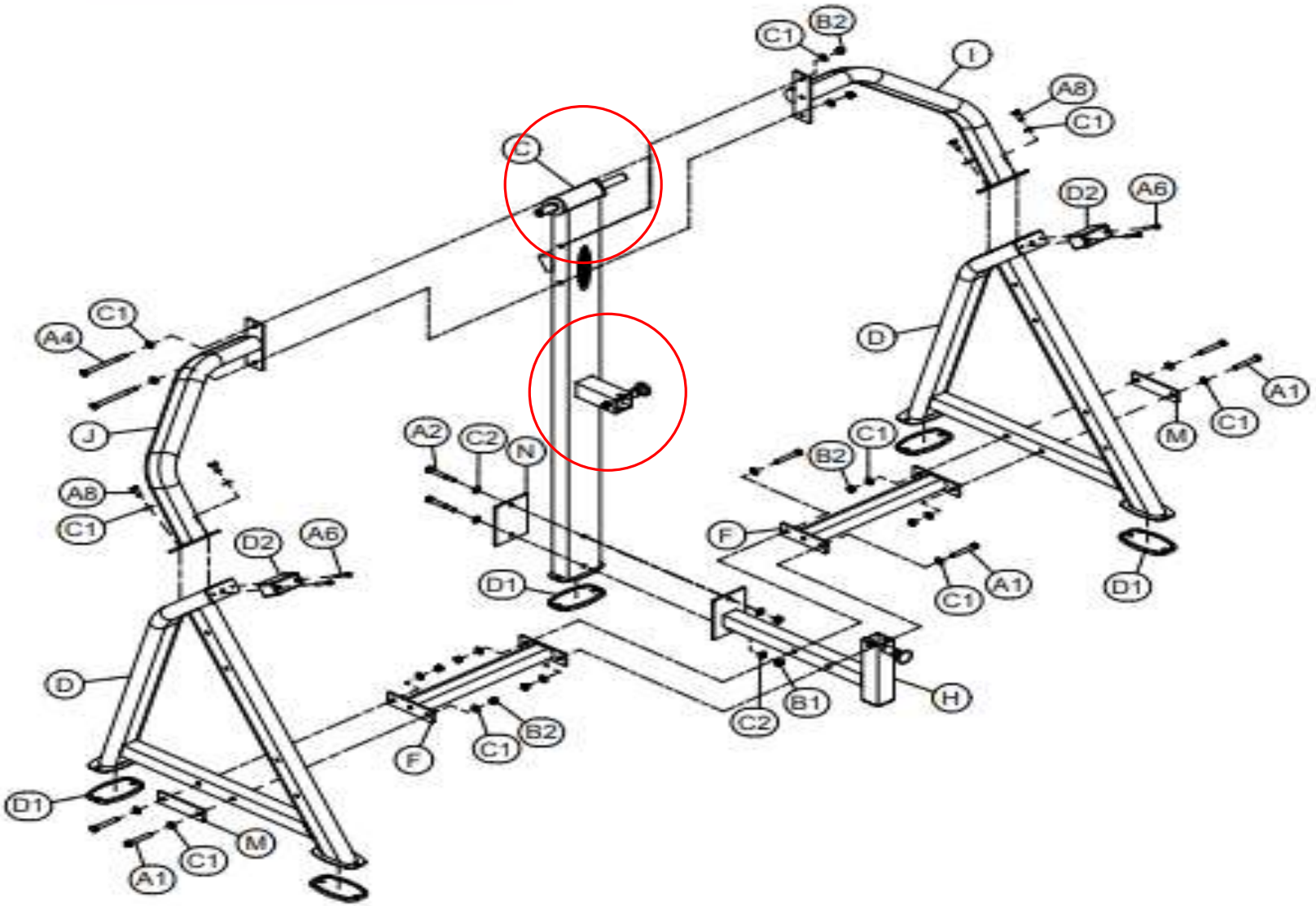

Above shows STEP 2
assembled and completed

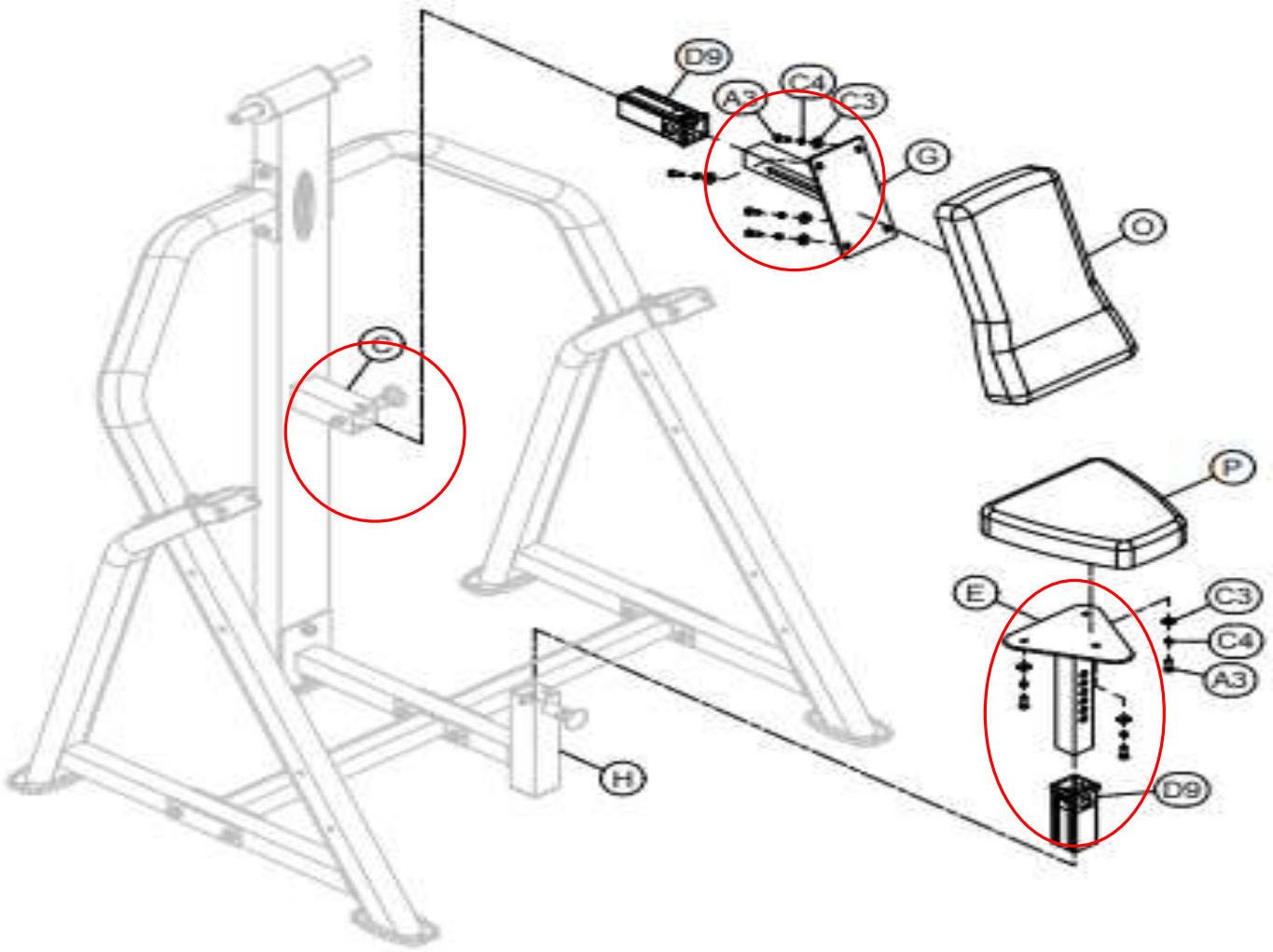

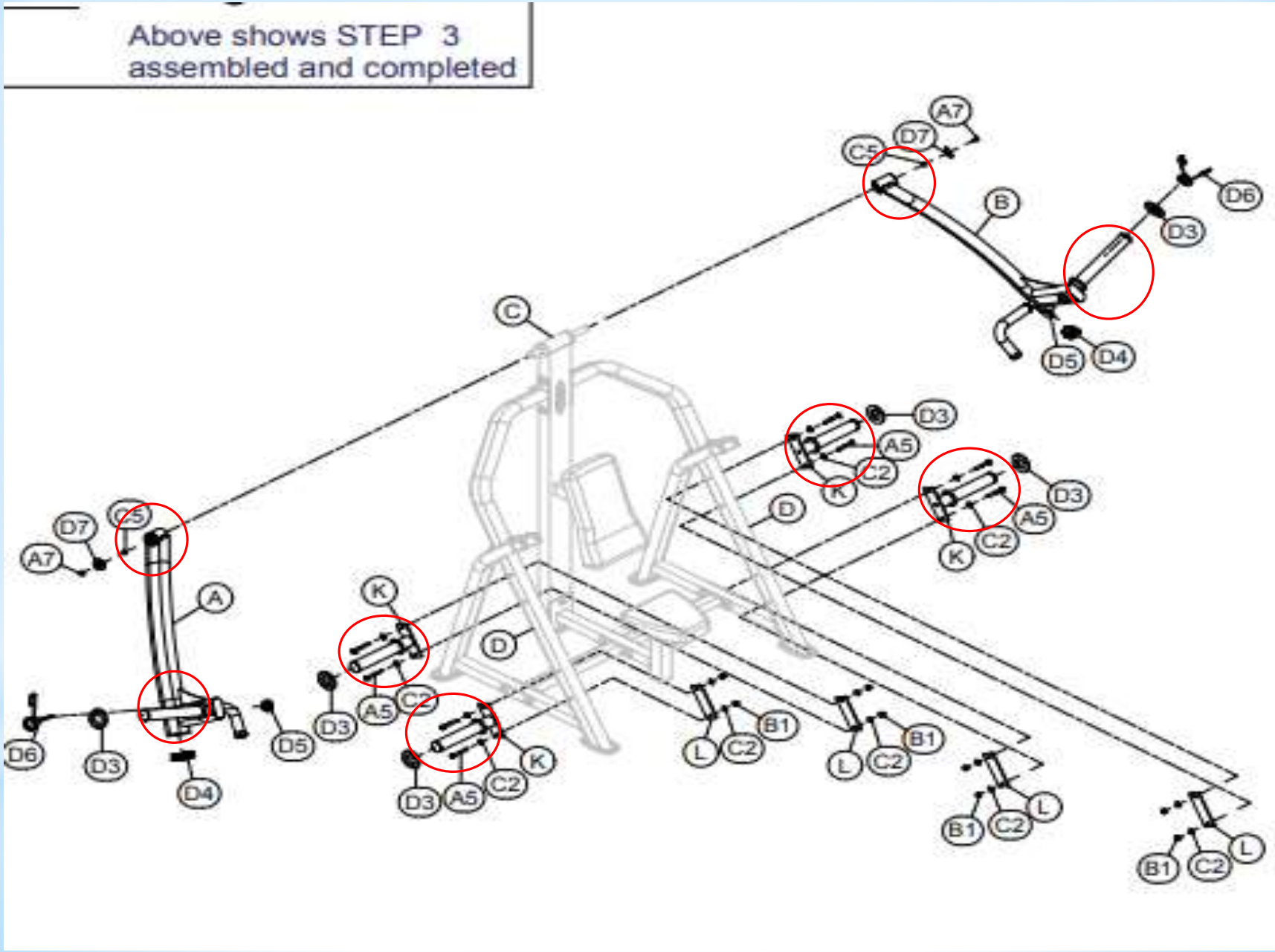
Above shows STEP 3
assembled and completed
A7
D7
C5
B
D6
D3
C
D5
D4
D3
A5
C2
K
D
D3
A5
C2
K
A7
D7
C5
A
K
D
D6
D3
D4
D5
D3
A5
C2
D3
A5
C2
K
L
C2
B1
L
C2
B1
B1
C2
L
B1
C2
L

# PSIP

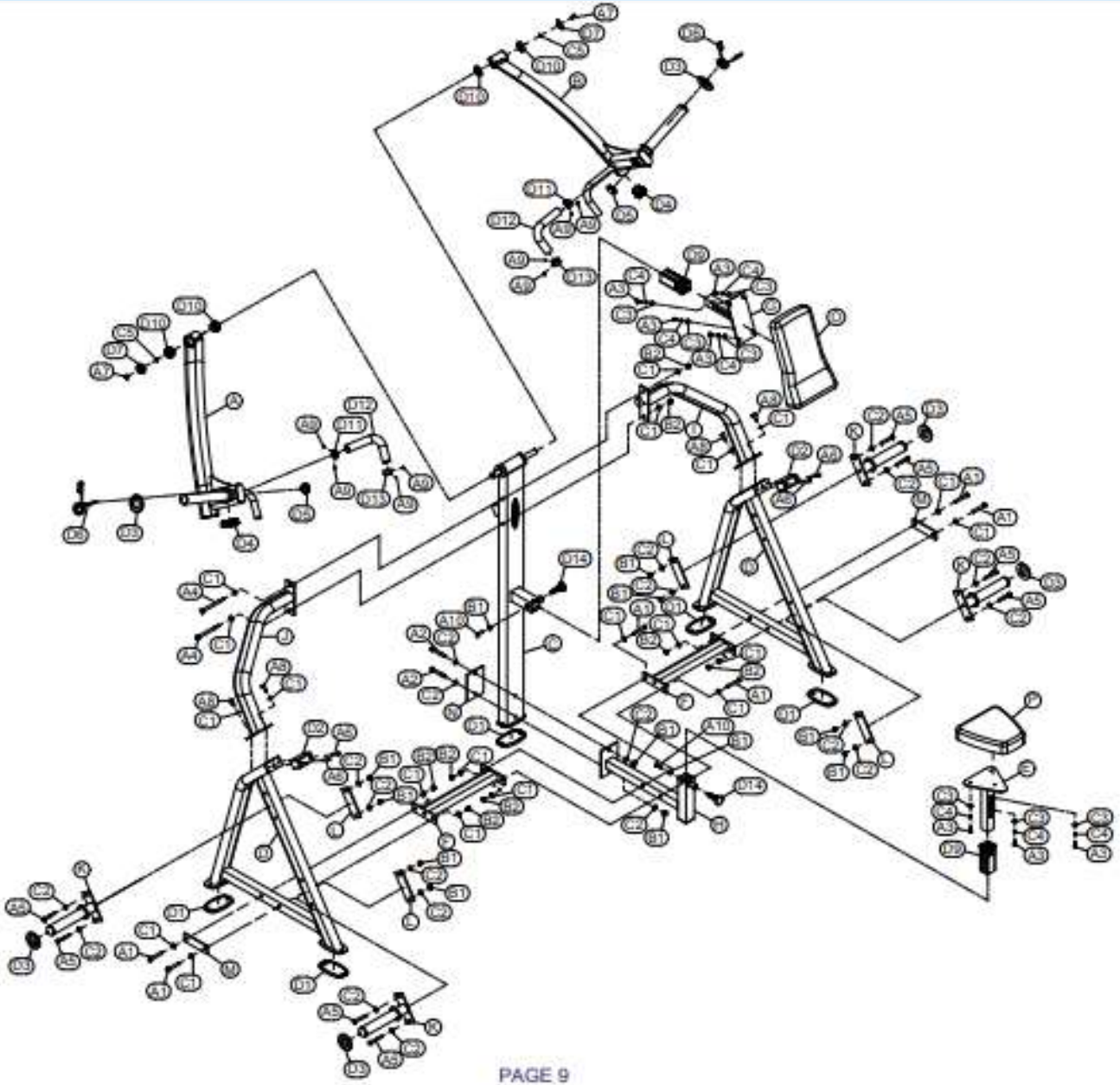

# *Well done!

