*PSBP Maintenance



* Customers can put some grease on pivot points(red circle place), with brass or gunmetal bushings.





* Let's maintain your machine!

PSBP HARDWARE
(shown in actual size)

D1.Rubber Insert (9310-076)..... [6PCS]
D2.Block Rubber (9310-131)..... [2PCS]
D3.Nylon Bushing (9211-047)..... [2PCS]
D4.1/2"X38 Pop Pin (8250-065G) pre-installed..... [2PCS]
D5.End Closure (8130-131)..... [2PCS]
D6.Rubber Dount (9310-016)..... [6PCS]
D7.Ø50 End Cap (9211-020)..... [2PCS]
D8.Pinch Cock (OC-06)..... [2PCS]
D9.50X100 End Cap (9211-193)..... [2PCS]
D10.Bearing (8510-037) pre-installed..... [4PCS]
D11.Chrone Collar (8130-287) pre-installed..... [2PCS]
D12.Chrone Collar (8890-048) pre-installed..... [2PCS]
D13.Impregnated With Handle (9162-208) pre-installed. [2PCS]

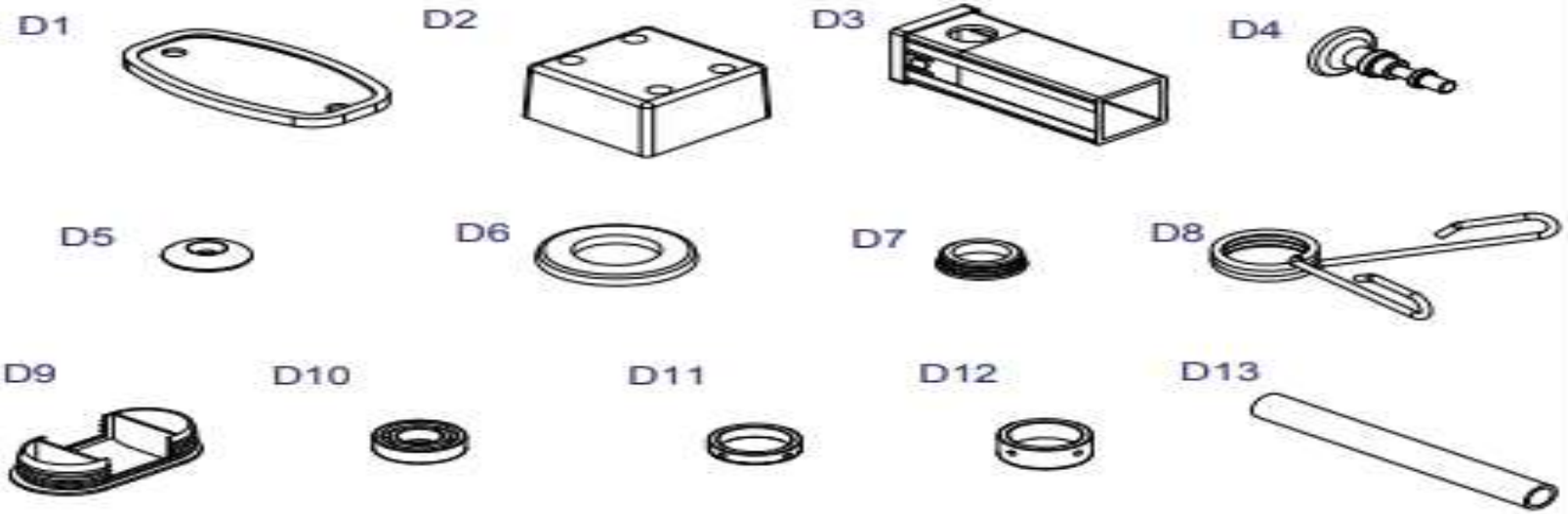

PSBP HARDWARE

(shown in actual size)

A[1PCS]

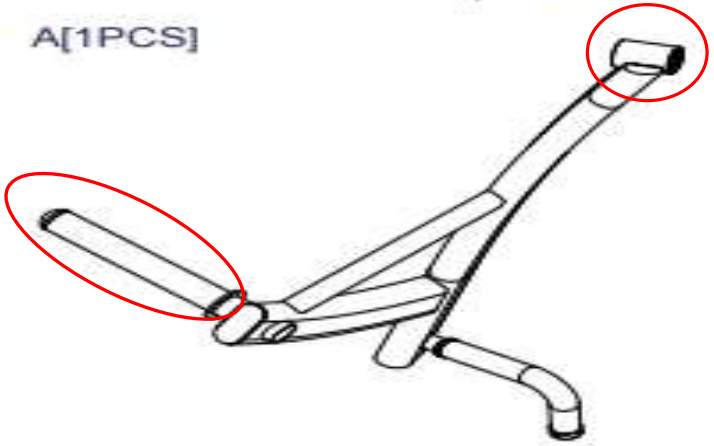

B[1PCS]

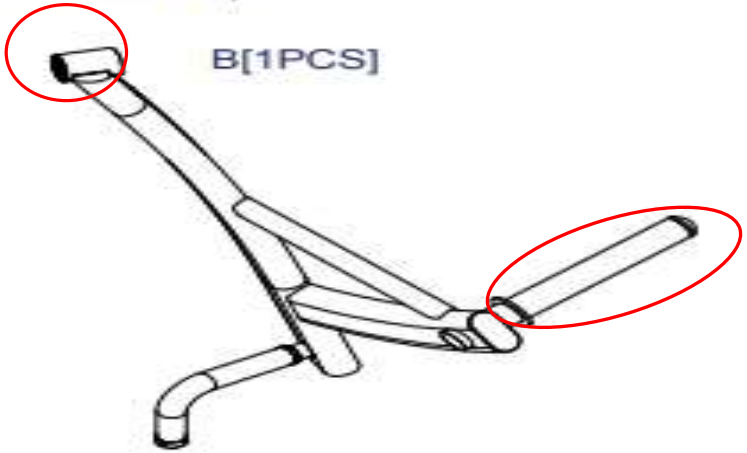

C[1PCS]

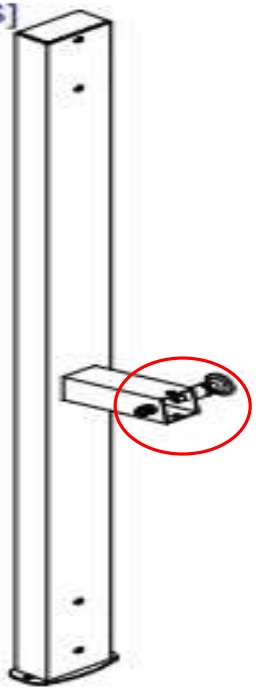

D[1PCS]

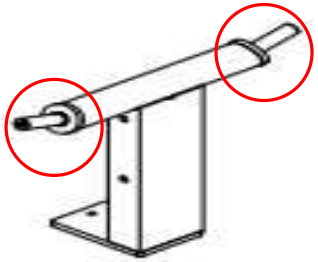

E[1PCS]

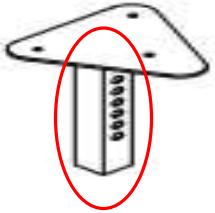

G[1PCS]

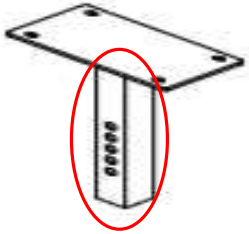

H[1PCS]

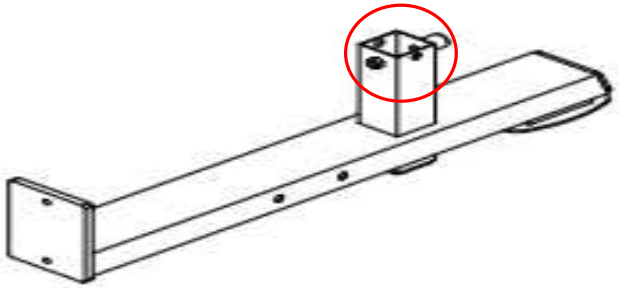

PSBP HARDWARE

(shown in actual size)

K[1PCS]

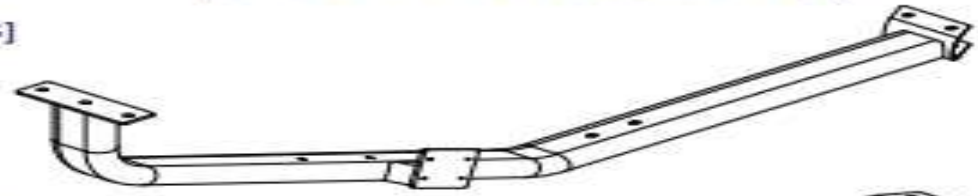

L[1PCS]

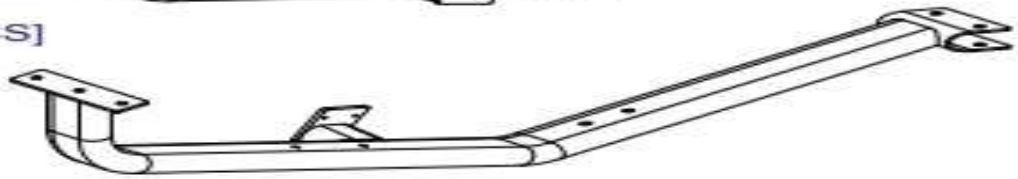

F[1PCS]

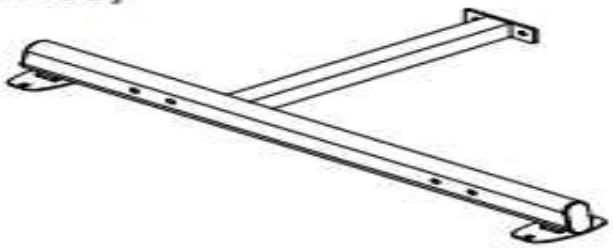

I[1PCS]

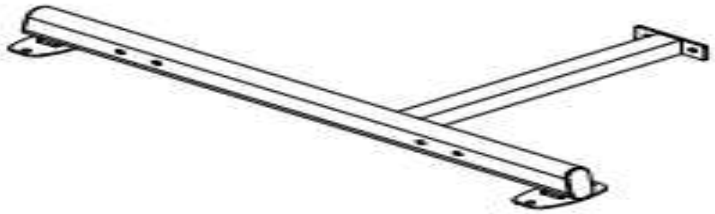

O[4PCS]
8313-235



P[2PCS]
8313-250



N[4PCS]

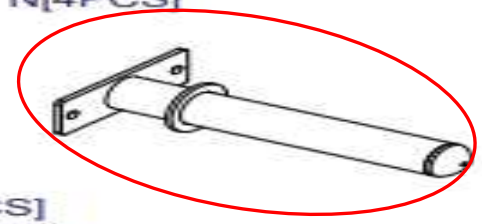

M[2PCS]



R[1PCS]
9111-105



S[1PCS]
9121-116

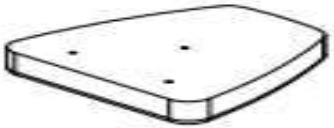

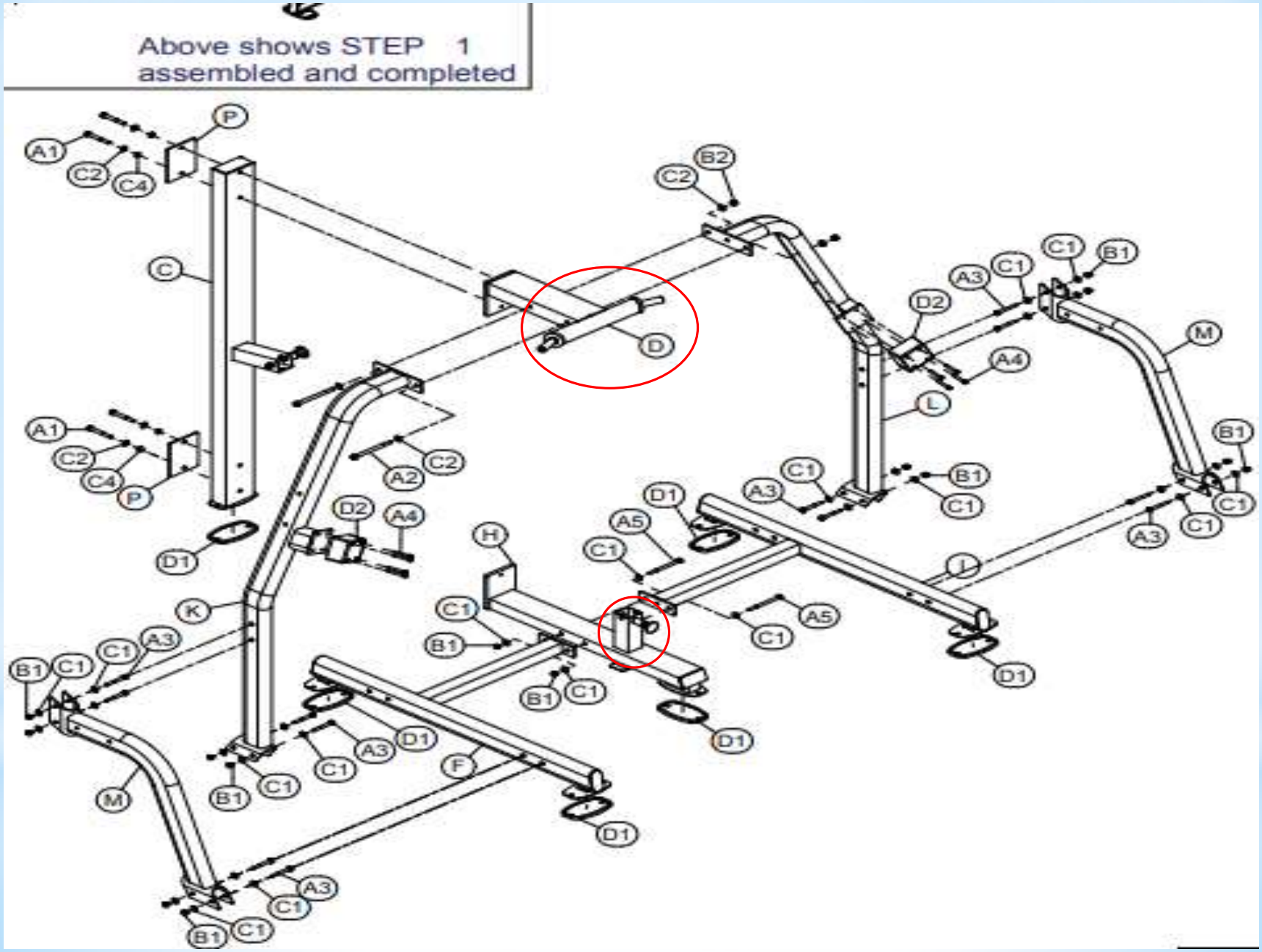
Above shows STEP 1
assembled and completed
A1
C2
C4
P
C
D
B2
C2
A3
C1
C1
B1
D2
M
A4
L
A1
C2
C4
P
A2
C2
D1
D2
A4
H
A5
C1
D1
A3
C1
B1
C1
B1
C1
A3
C1
J
K
C1
B1
A5
C1
D1
B1
C1
B1
C1
A3
C1
D1
D1
A3
C1
F
M
B1
C1
D1
A3
C1
B1
C1

Above shows STEP 2
assembled and completed

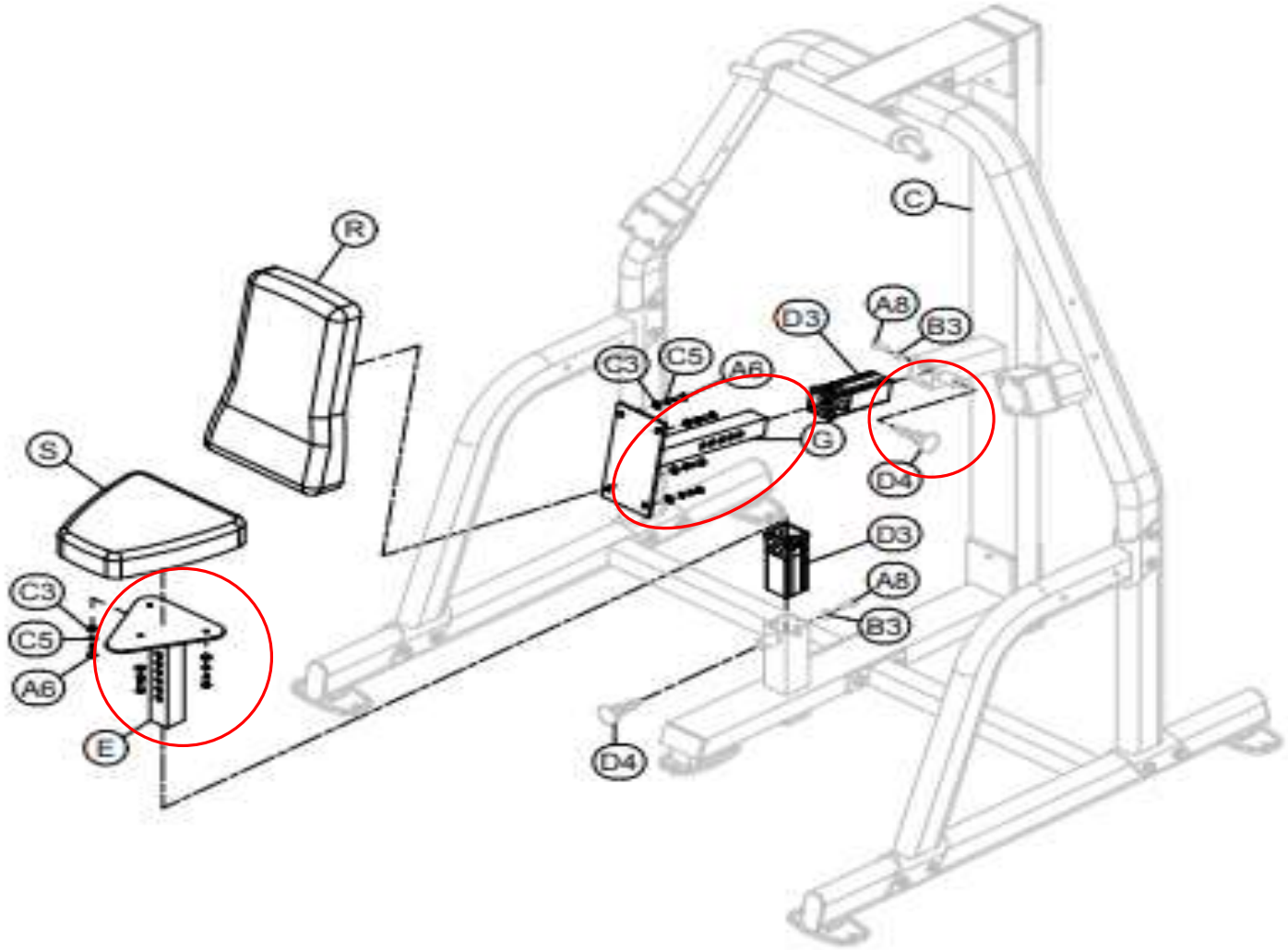

Above shows STEP 3
assembled and completed

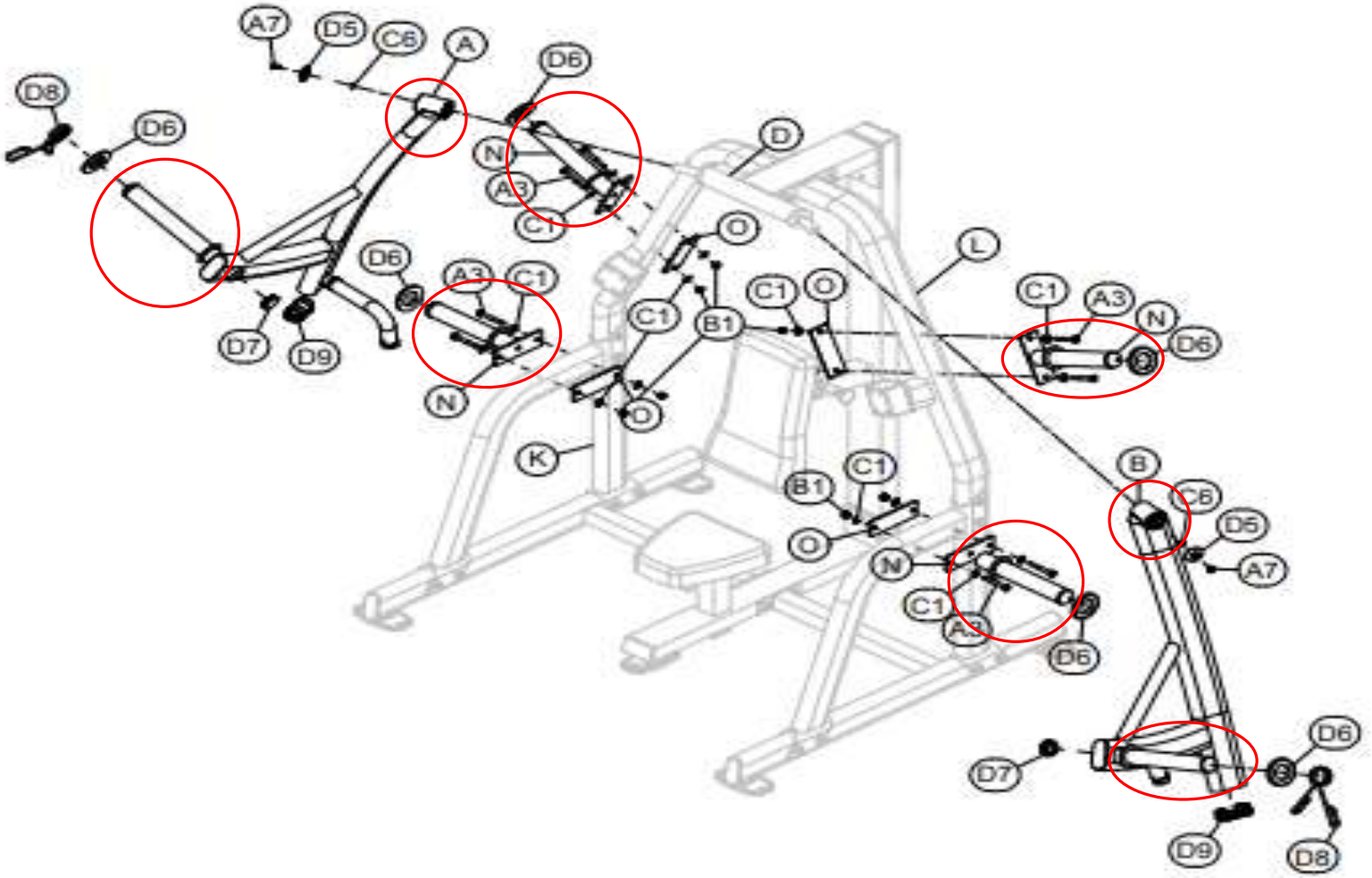

PSBP

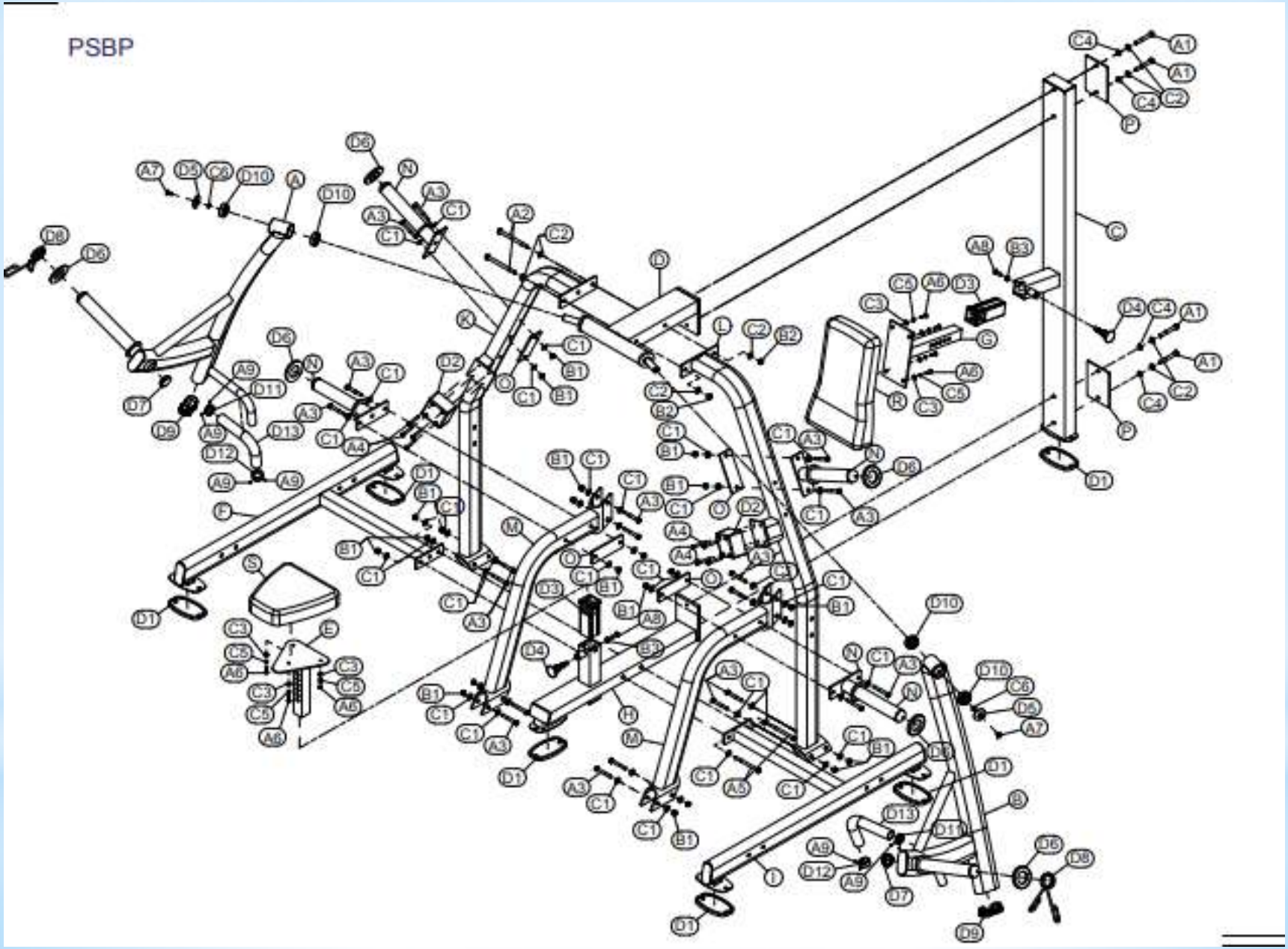
A
B
C
D
E
F
G
H
I
J
K
L
M
N
O
P
S
A1
A2
A3
A4
A5
A6
A7
A8
A9
B1
B2
B3
C1
C2
C3
C4
C5
C6
D1
D2
D3
D4
D5
D6
D7
D8
D9
D10
D11
D12
D13

*Well done!

