*PLHP Maintenance



* Customers can put some grease on pivot points(red circle place), with brass or gunmetal bushings.





* Let’s maintain your machine!

PCRPCS HARDWARE
(shown in actual size)

A[1PCS]

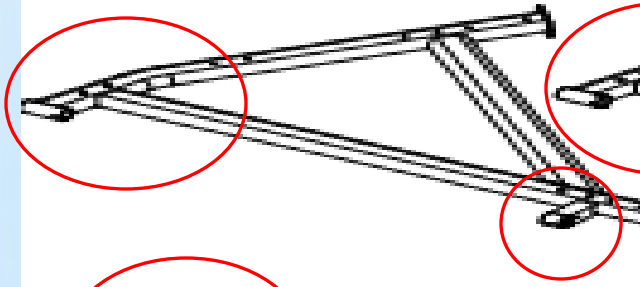

B[1PCS]

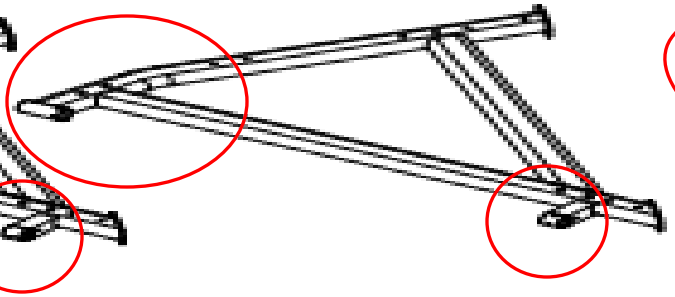

C[1PCS]

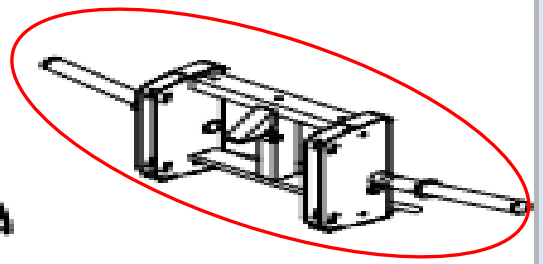

D[1PCS]

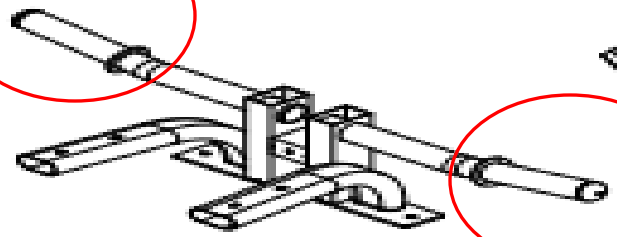

FA[1PCS]

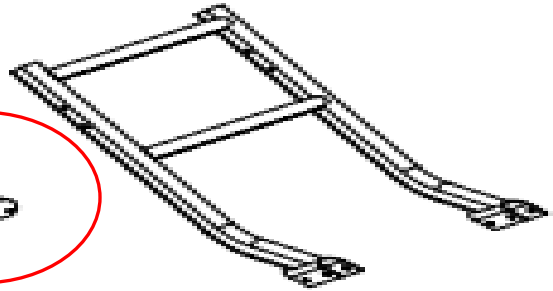

FB[1PCS]

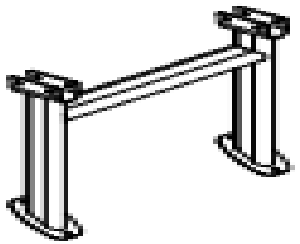

G[1PCS]

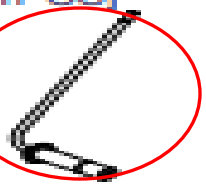

H[1PCS]

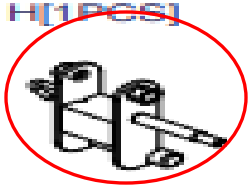

K[1PCS]



_[1PCS]

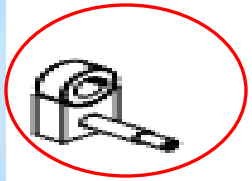

M[1PCS]

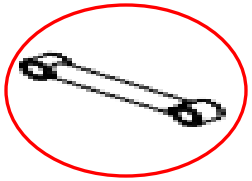

O[1PCS]



Z[1PCS]



PLHP.5 HARDWARE
(shown in actual size)

S[2PCS]
8280-030

J[4PCS]
6730035



P[2PCS]
8323-234

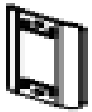

W[4PCS]
8342-048



N[2PCS]
9131-054



Q[1PCS]
9111-092

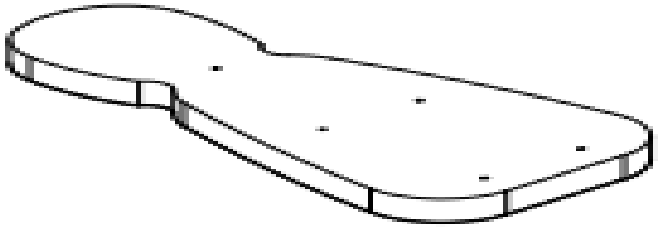

X[2PCS]
8343-305

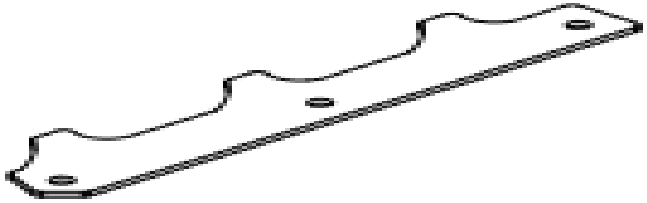

Y[2PCS]
8312-013



Z1[1PCS]
9310-095

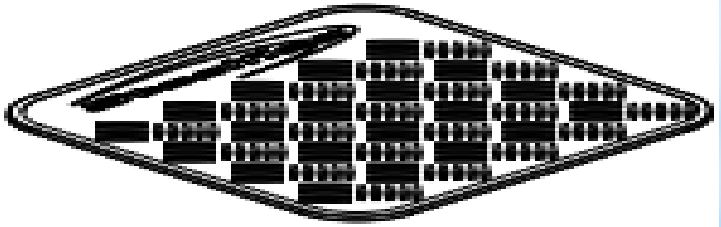

STEP 1

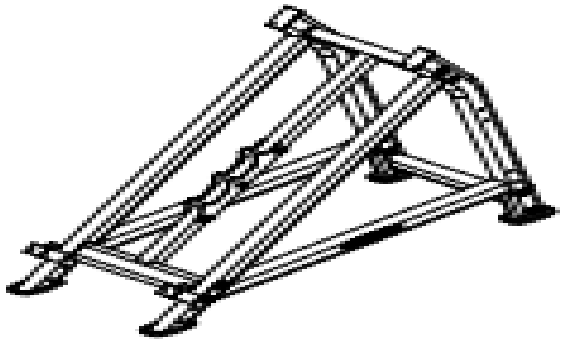

Above shows STEP 1
assembled and completed

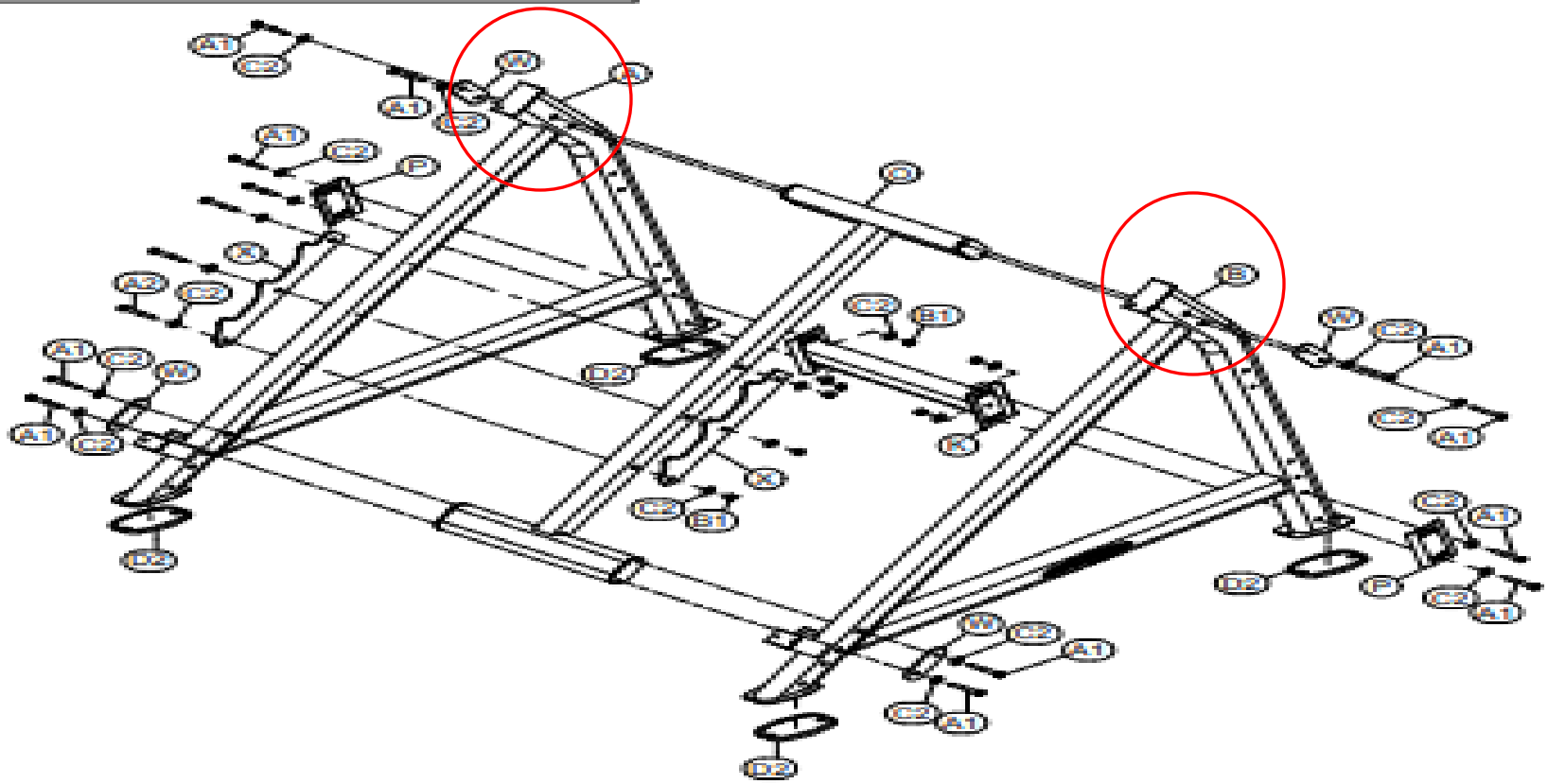

STEP 2

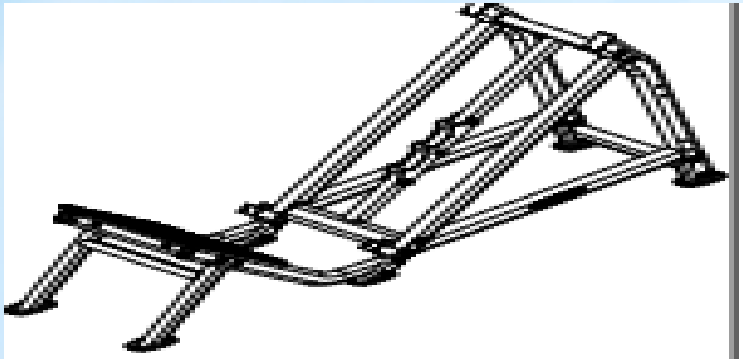

Above shows STEP 2 assembled and completed

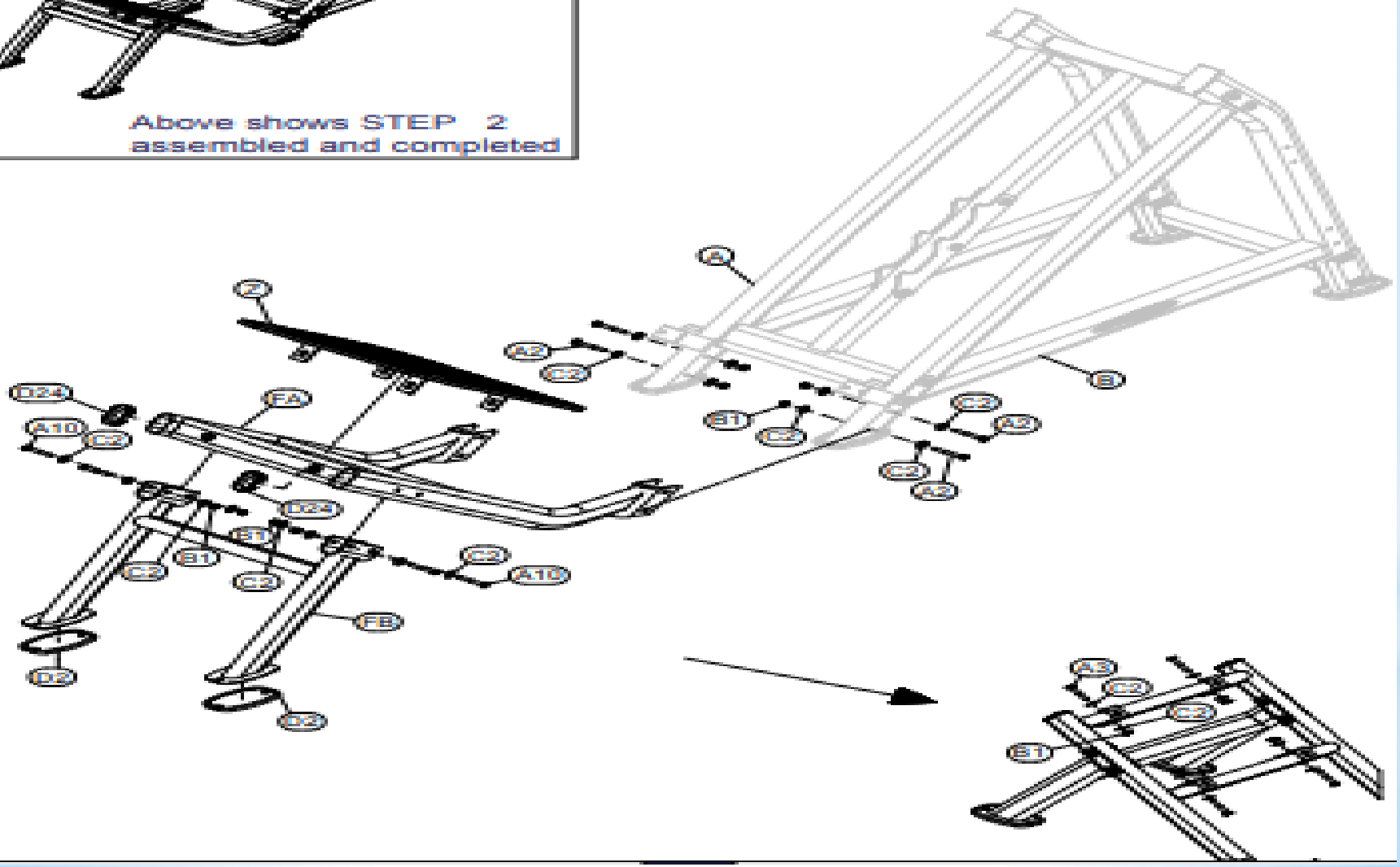

STEP 3

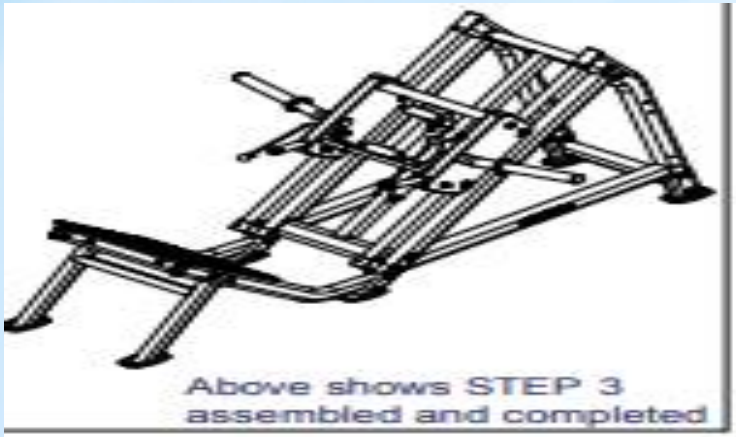

Above shows STEP 3 assembled and completed

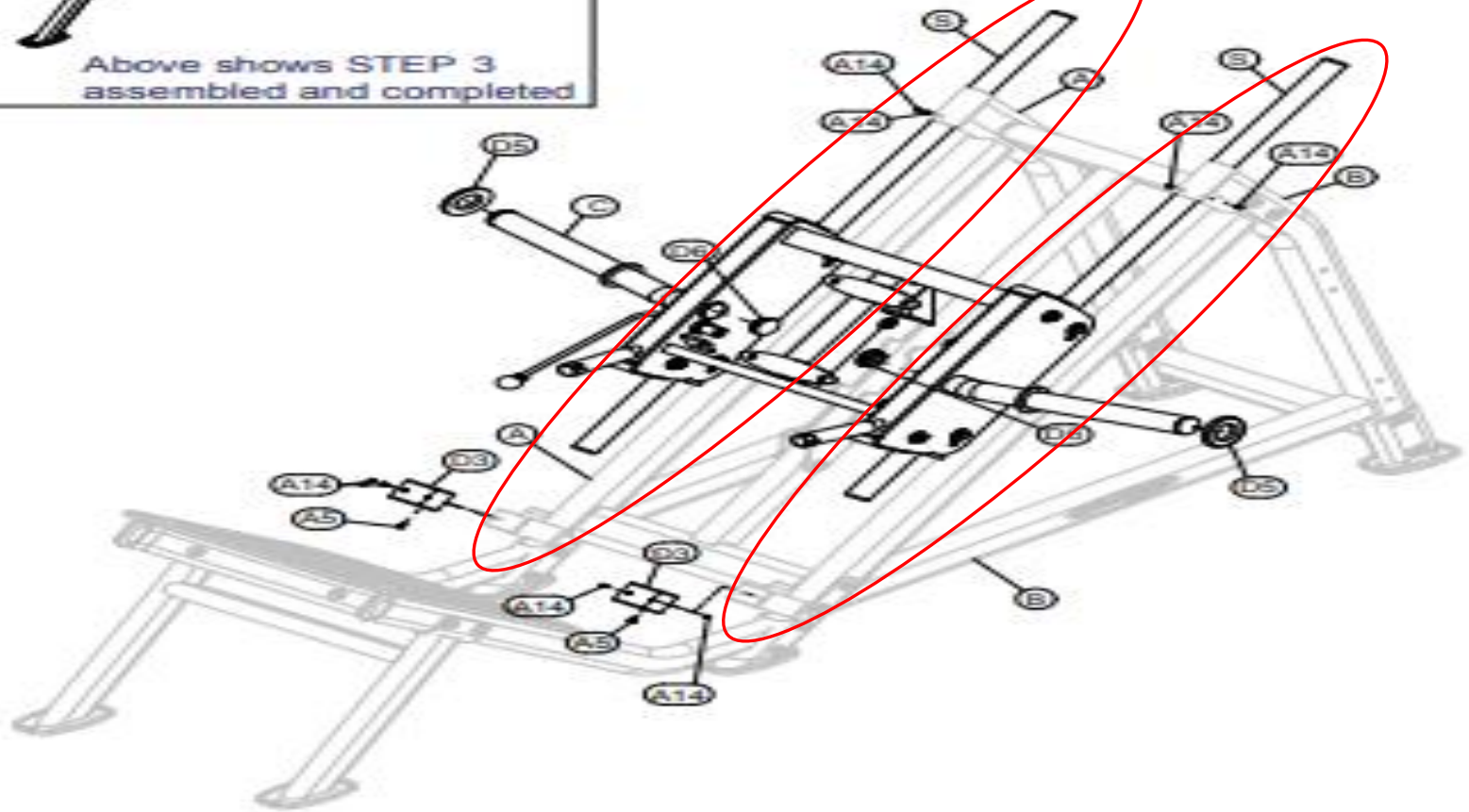

STEP 4

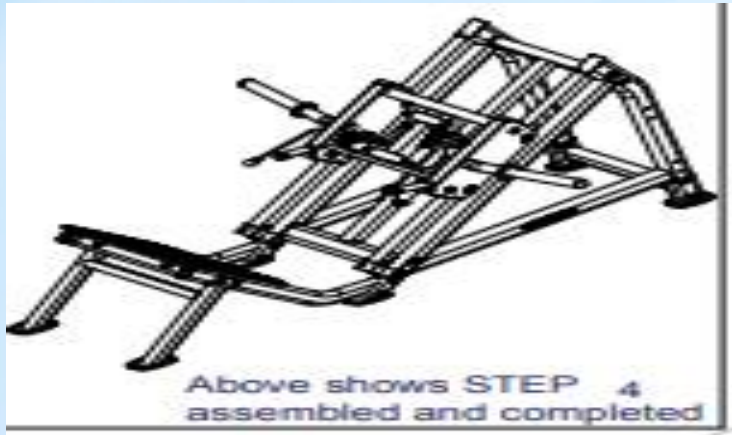

Above shows STEP 4 assembled and completed

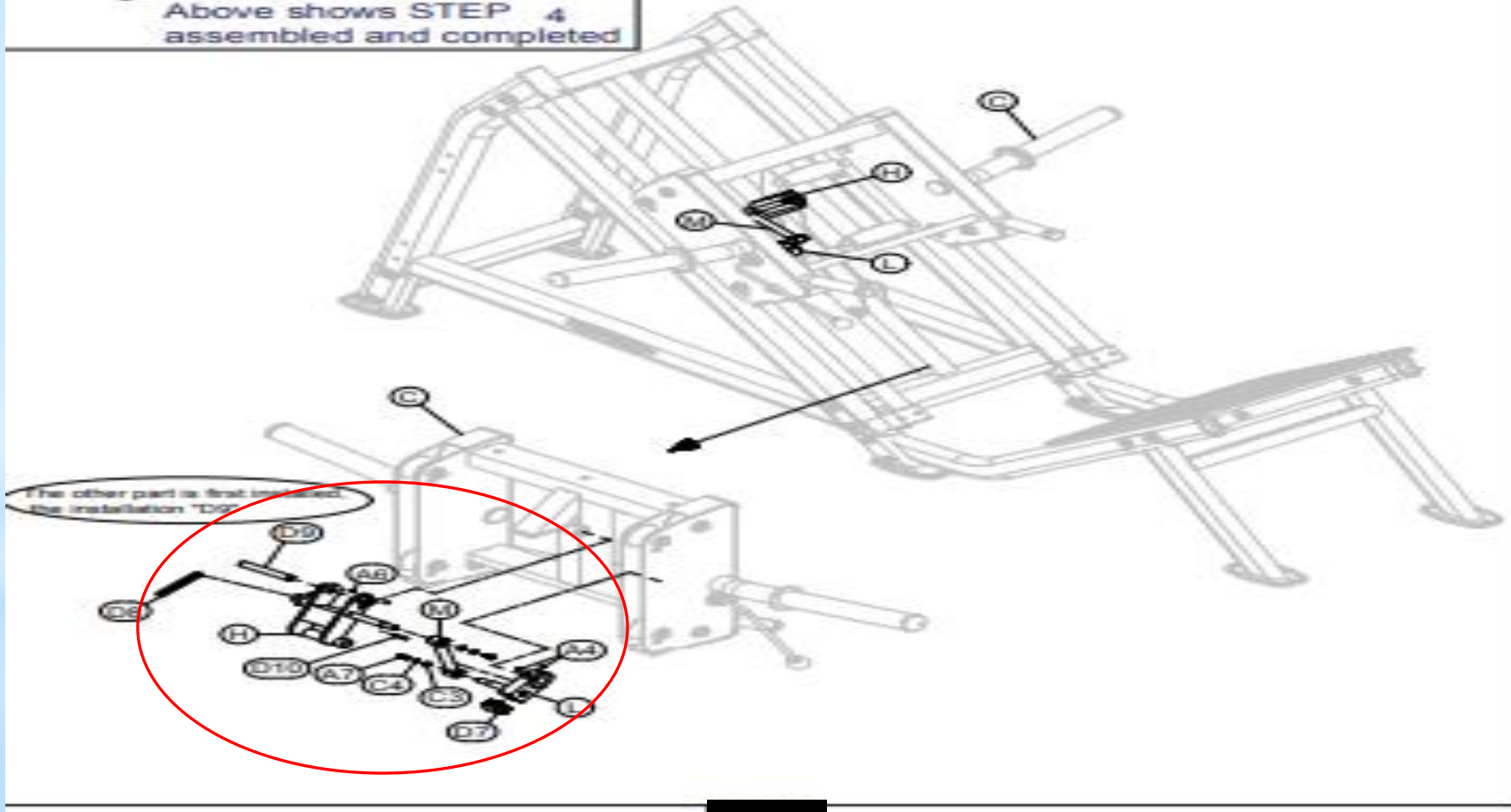

STEP 5

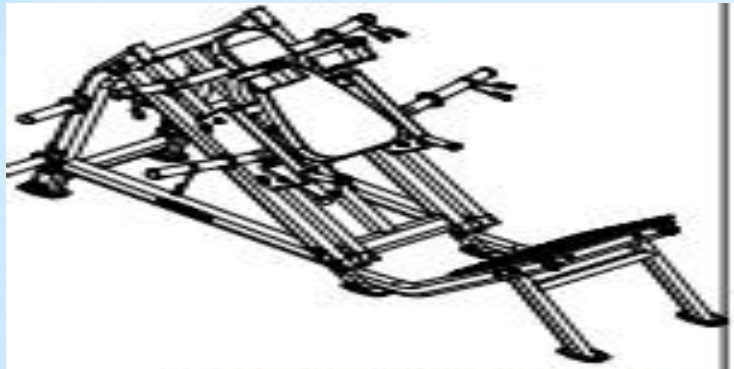

Above shows STEP 5 assembled and completed

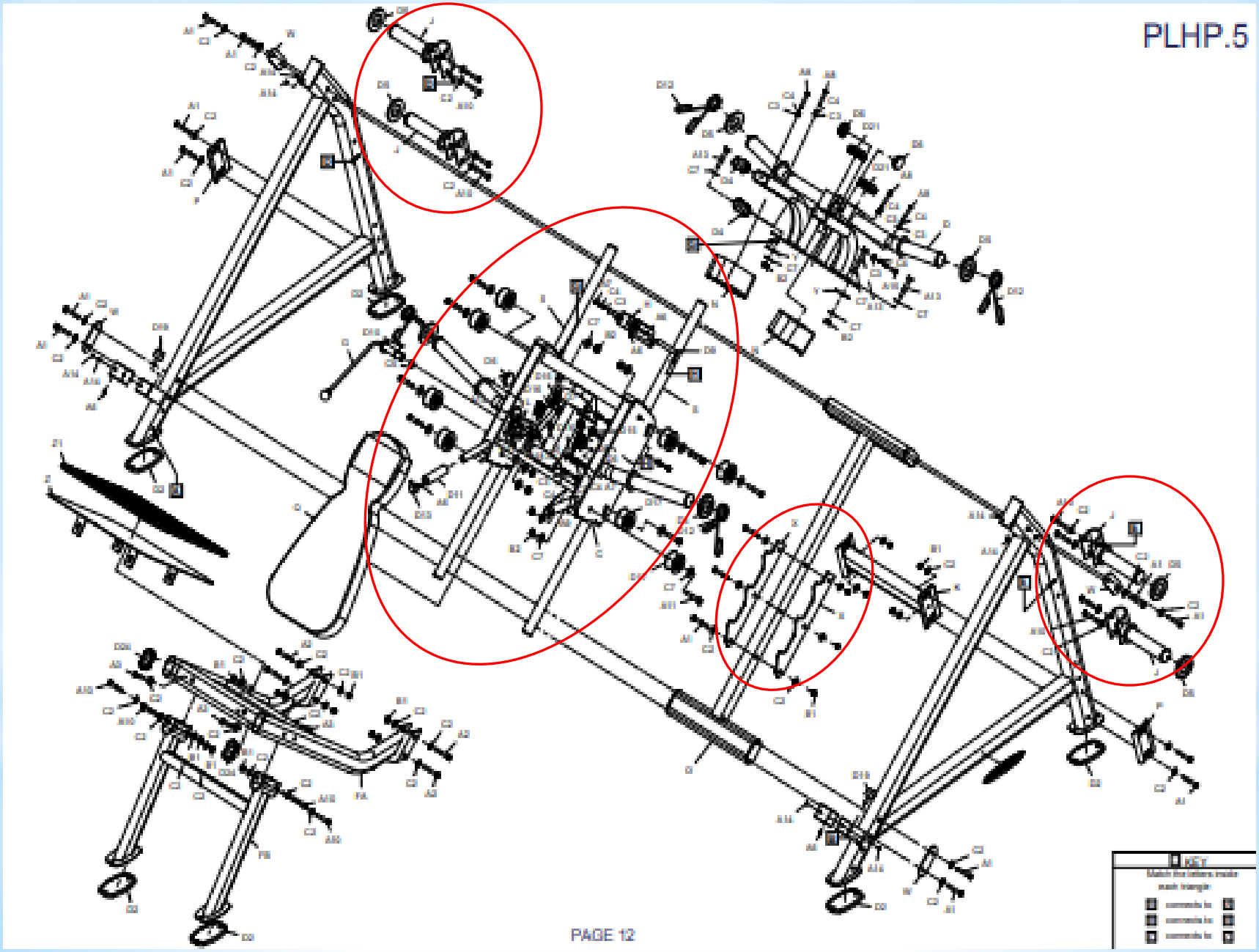
PLHP.5
KEY
PAGE 12

*Well done!

