*PLBC Maintenance



* Customers can put some grease on pivot points(red circle place), with brass or gunmetal bushings.





* Let's maintain your machine!

PLBC.5 PARTS

A [1PCS]

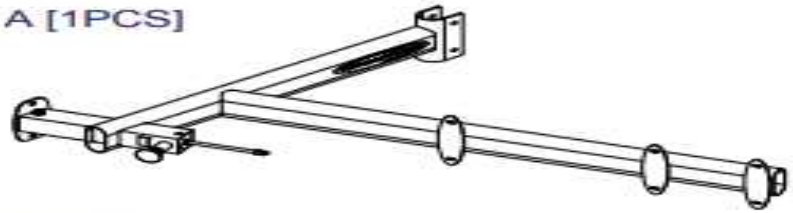

B [1PCS]



C [1PCS]



D [1PCS]

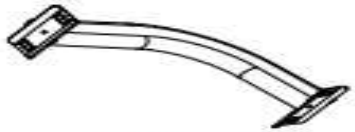

E [1PCS]



F [1PCS]



I [2PCS]



G [1PCS]



H [1PCS]

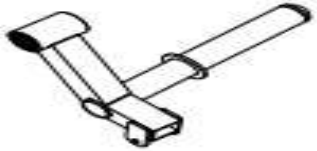

L [2PCS]
8323188



M [1PCS]
9111072

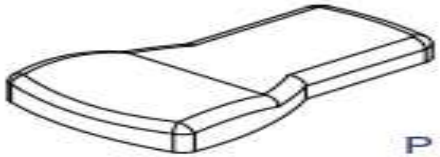

N [1PCS]
9144016



Q [2PCS]
9131037



P [1PCS]
9131025

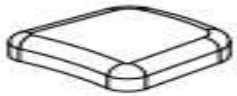

S [1PCS]
9119010



PLBC.5 PARTS

D1. Chrome colla (8890-061) pre-installed ..... [2PCS]
D2. Steel Casing (8530-009) ..... [2PCS]
D3. End Cap (9211-087) ..... [2PCS]
D4. Ø50 End Cap (9211-020) ..... [2PCS]
D7. 50x100 Round End Cap (9211-193) ..... [4PCS]
D8. Rubber Dount (9310-016) ..... [2PCS]
D9. Rubber Insert (9310-076) ..... [3PCS]
D10. Block Rubber (9310-077) ..... [2PCS]
D11. Pinch Cock (OC-06) ..... [2PCS]
D12. Cap Sleeve (9212-026) ..... [24PCS]
D13. Co er Washer (8520-001) pre-installed ..... [4PCS]
D14. Bearing (8510-020) pre-installed ..... [4PCS]
D15. Steel Casing (8120-082) pre-installed ..... [4PCS]
D16. Impregnated With Handle (9162-162) pre-installed ..... [2PCS]
D17. 60X60 Nylon Bushing (9211-047) ..... [1PCS]
D18. Hydraulic Seat Adjuster (8830-023) pre-installed ..... [1PCS]
D19.End Closure (8130-253) pre-installed..... [2PCS]

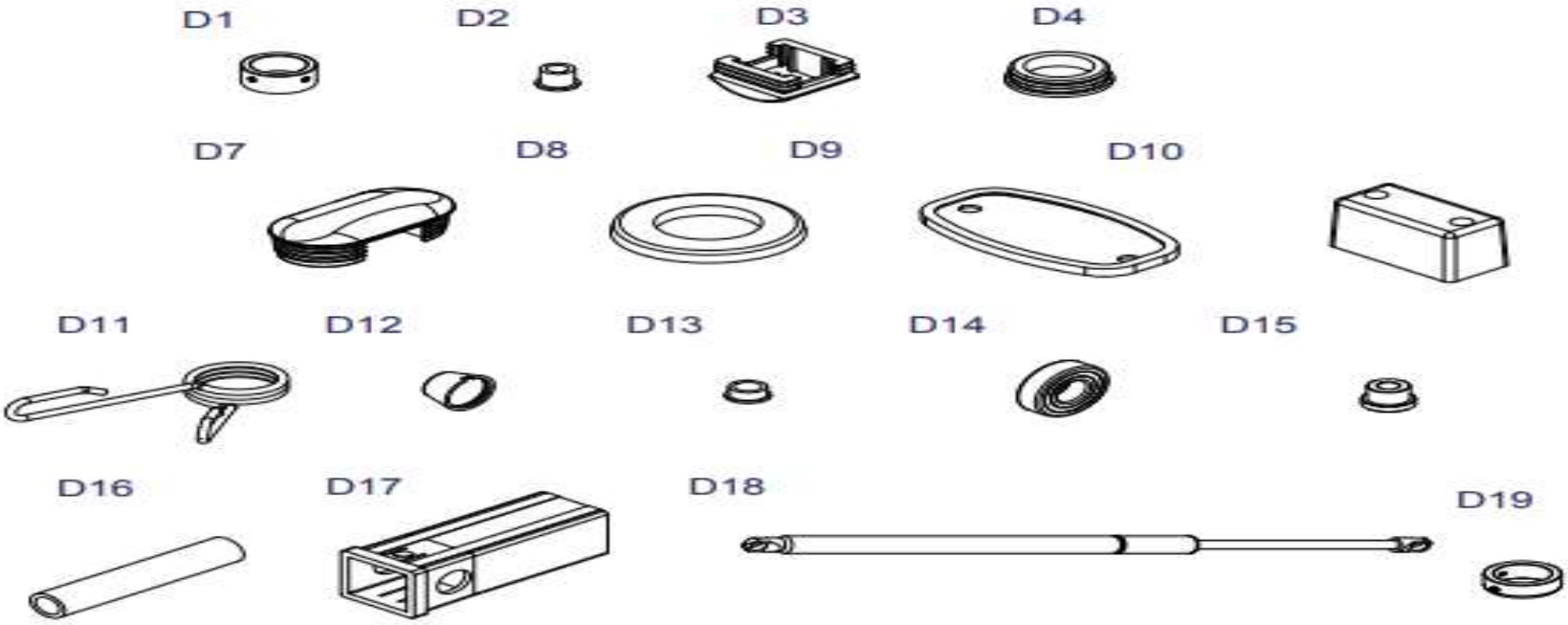

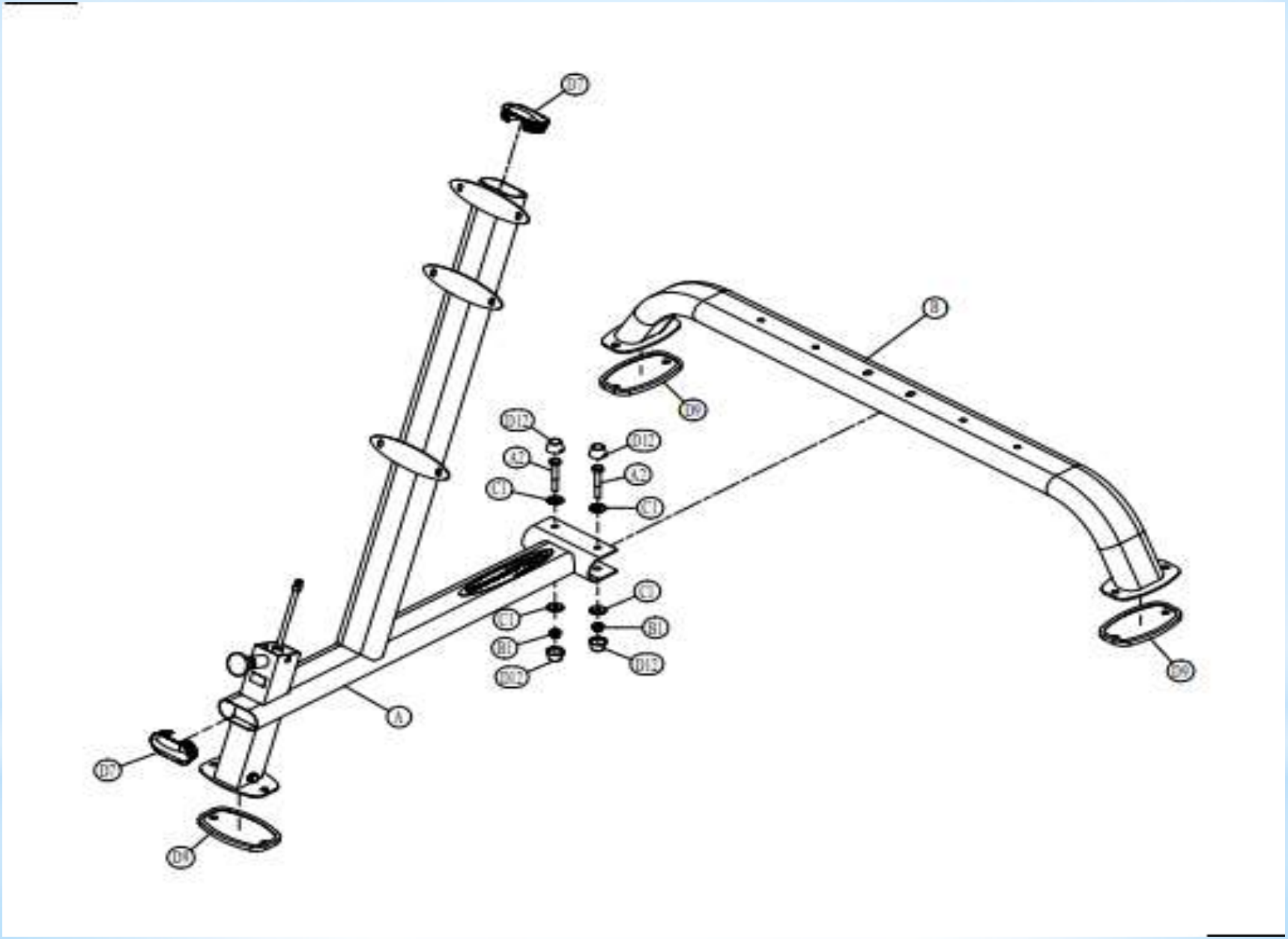
D7
B
D6
D12
A2
C1
D12
A2
C1
C
B1
D13
C1
B1
D12
A
D7
D6
D6

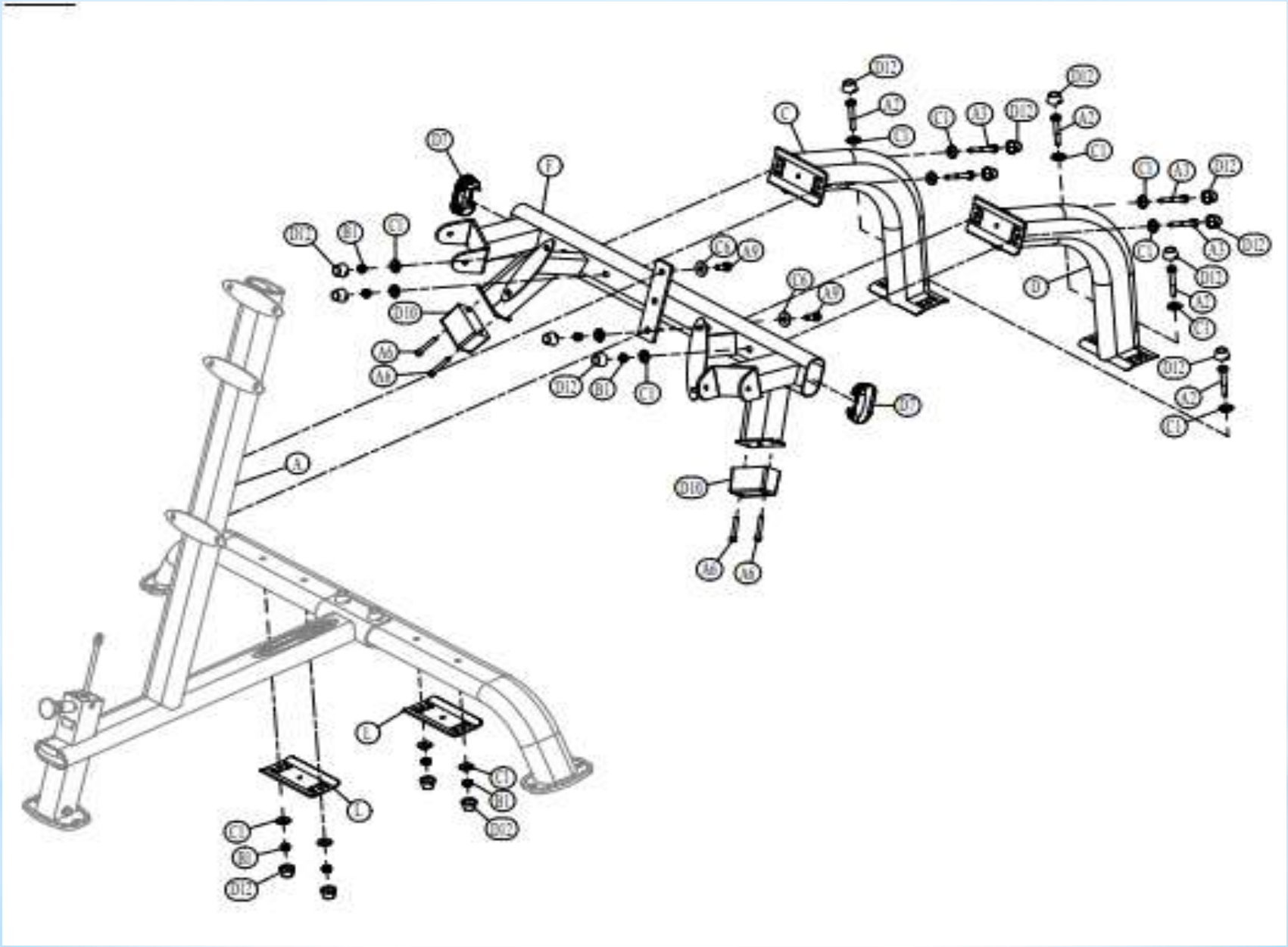
D12
A2
C1
A3
C
D7
F
B1
D10
A6
A9
D
A
E
L

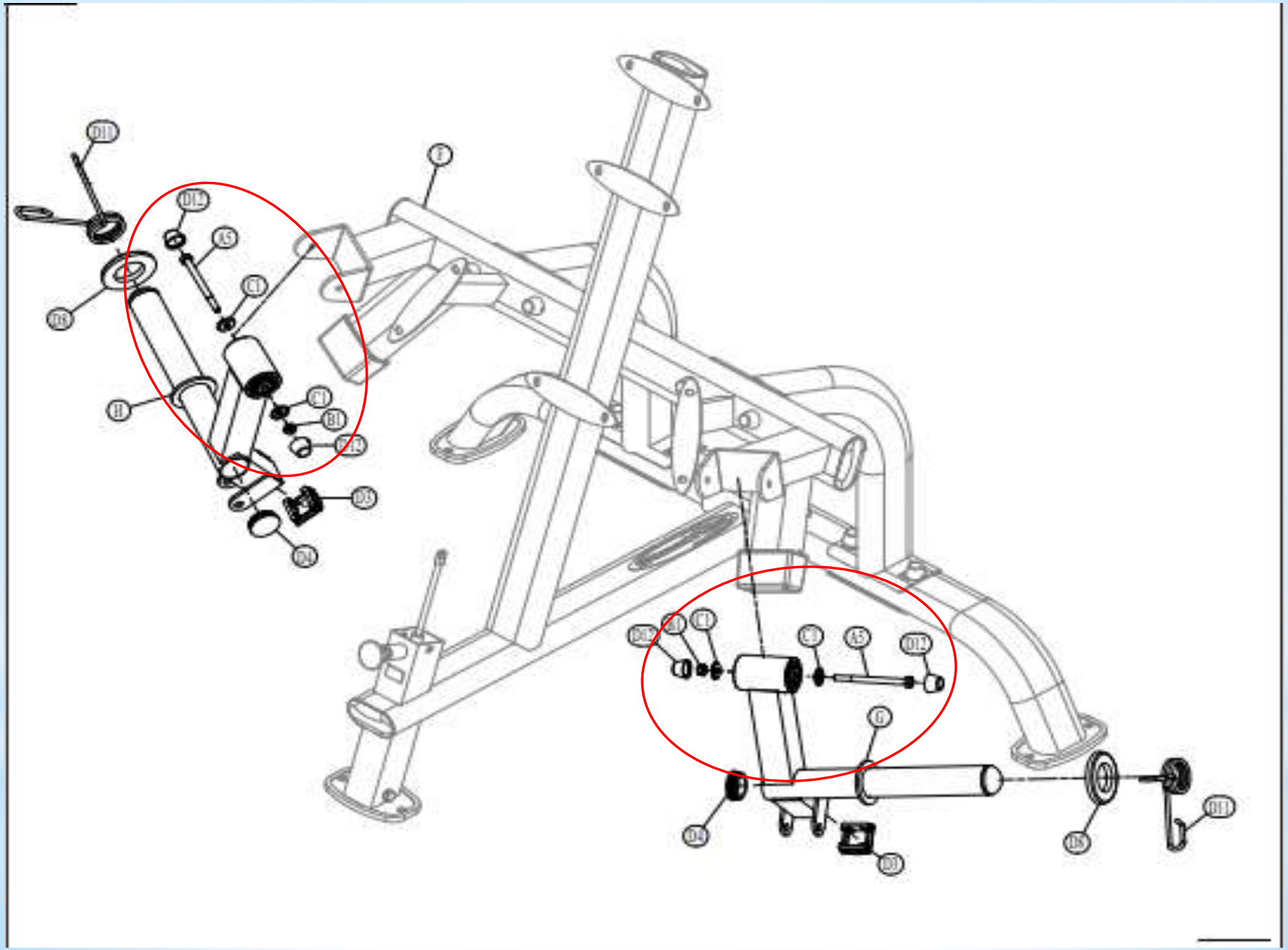
D11
D12
A5
C1
D8
H
C1
B1
D12
D3
D4
F
D12
B1
C1
C1
A5
D12
G
D4
D3
D8
D11

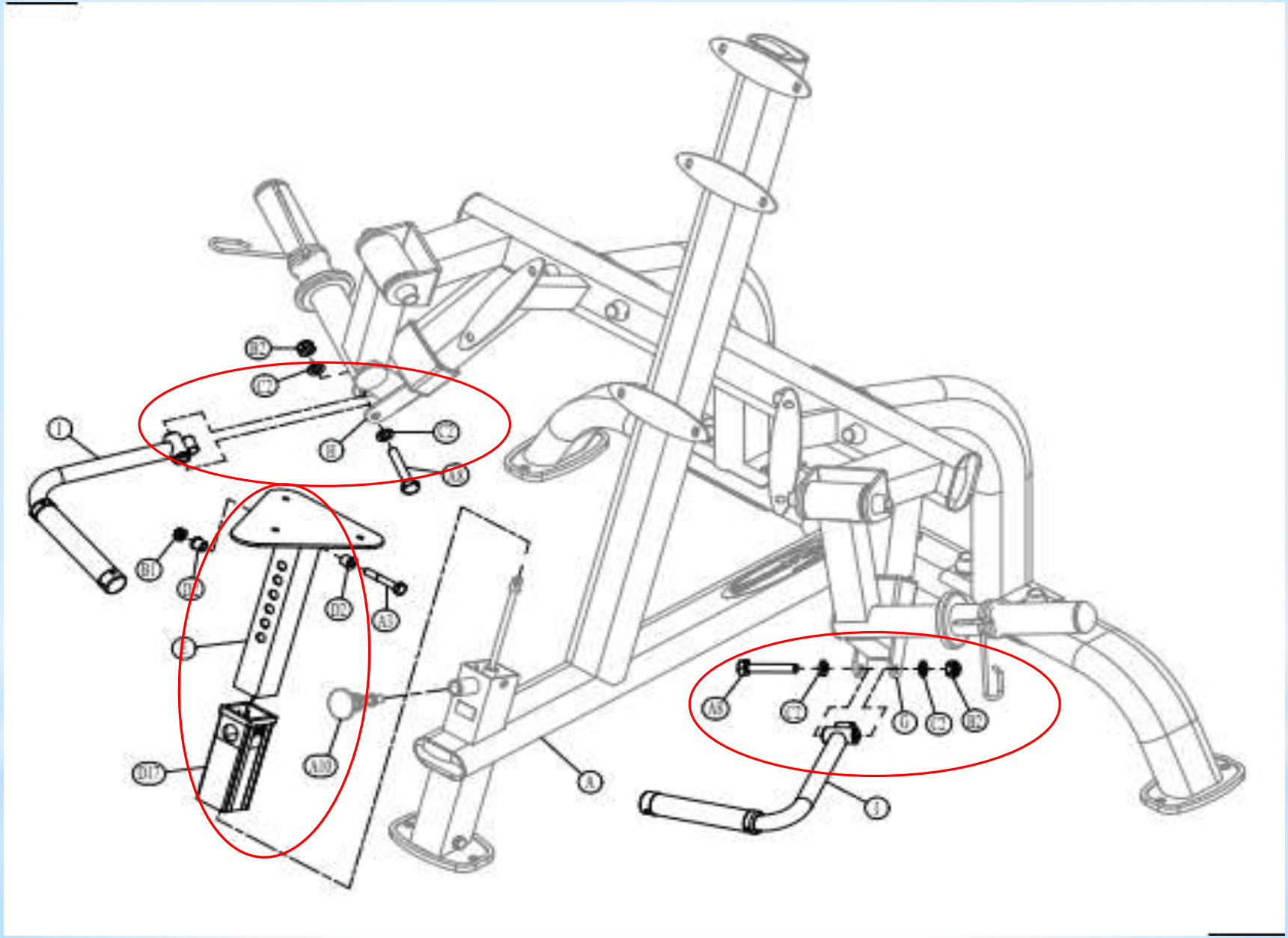

B2
C2
I
H
C2
A8
B1
D2
D2
A3
E
D17
A10
A
A8
C2
G
C2
B2
J

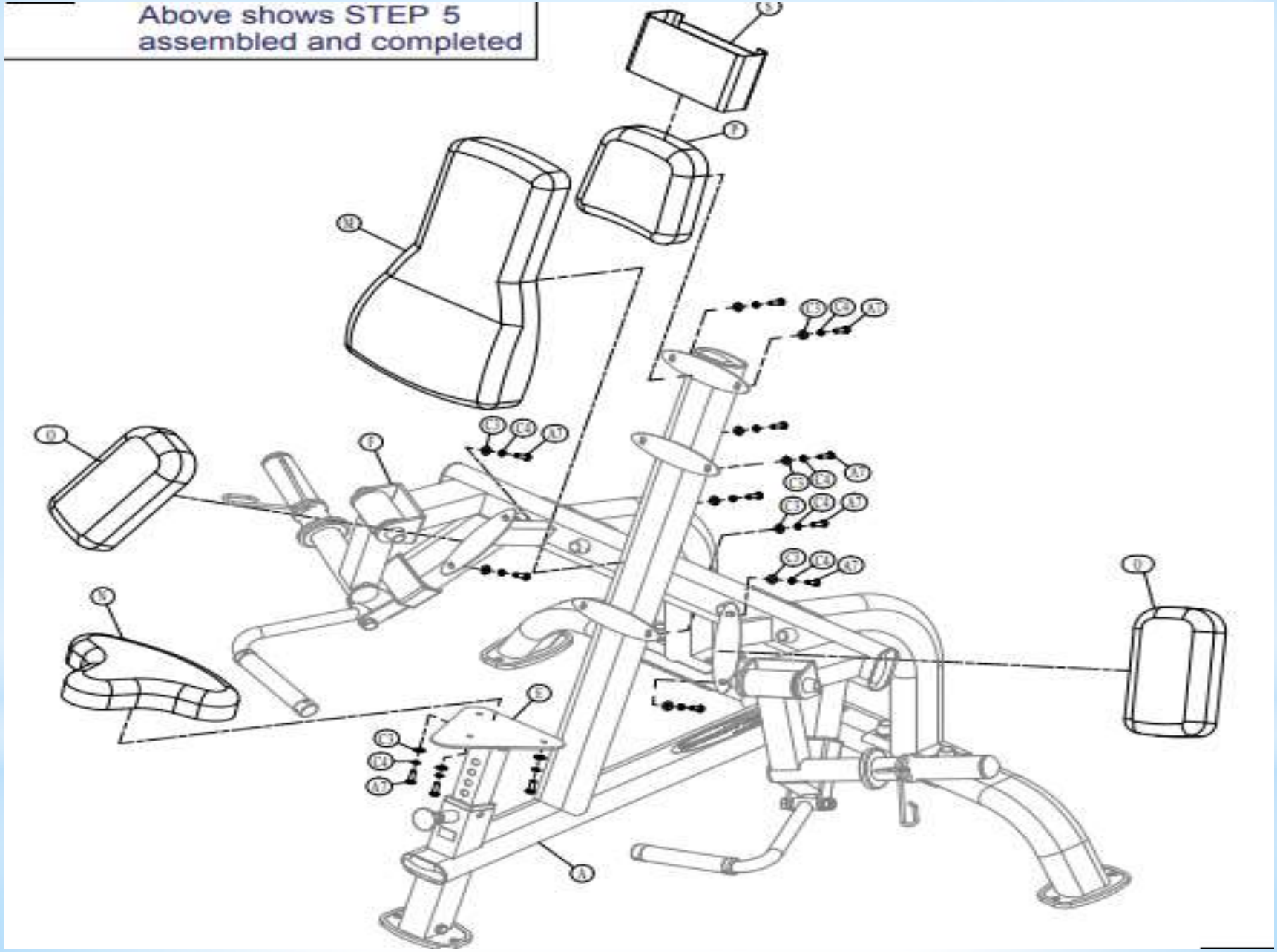
Above shows STEP 5
assembled and completed

PLBC.5
Exploded View

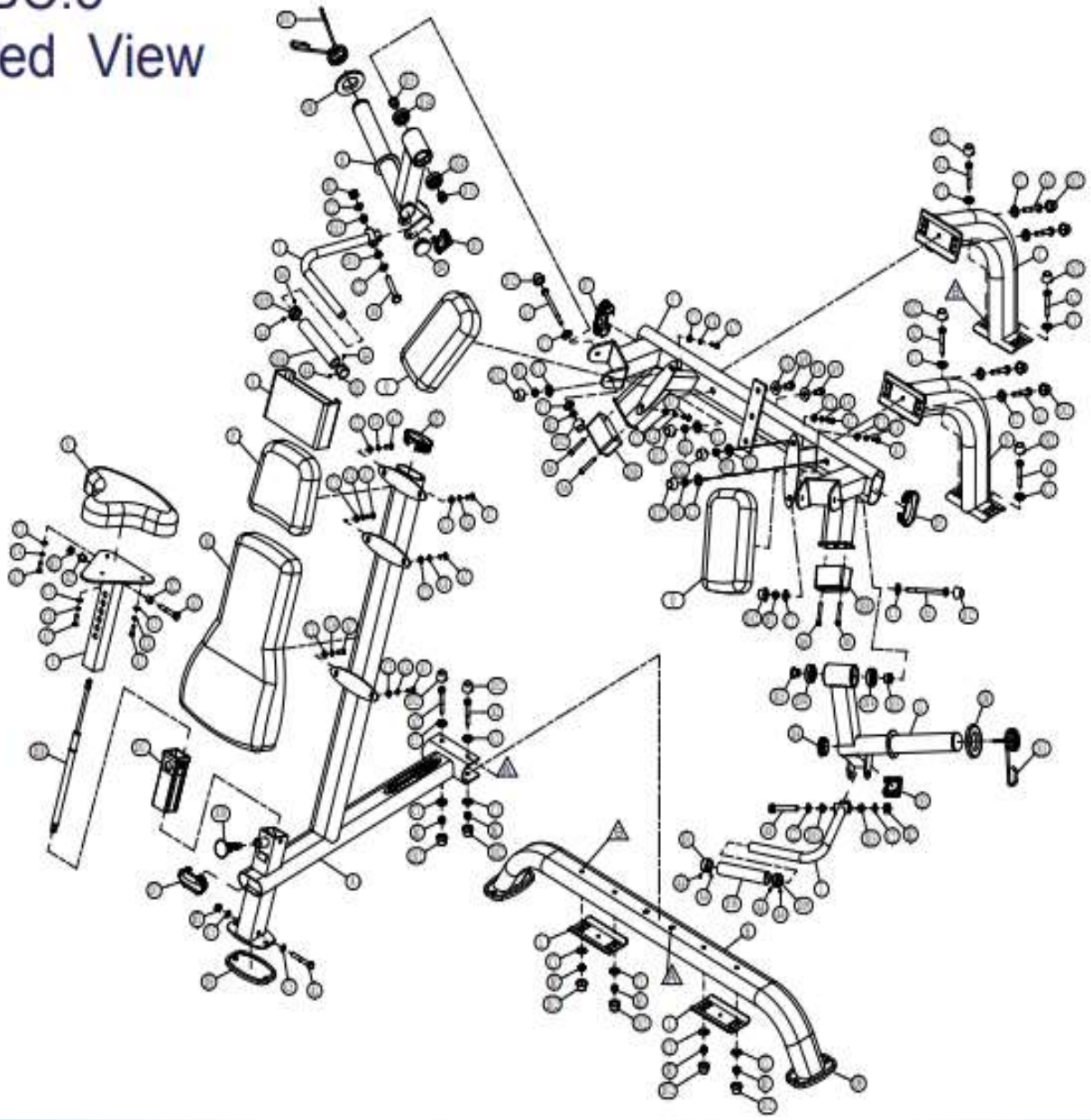

KEY
Match the letters inside each triangle
connets
connets

*Well done!

