*MHE1900 Maintenance



* Customers can put some grease on pivot points(red circle place), with brass or gunmetal bushings.





* Let's maintain your machine!

零件代碼	品 名 及 圖 案	用量	備 註
20MHE1900-A	主架 國寶O-200S-閃銀 國寶KL0158明漆 二塗二烤 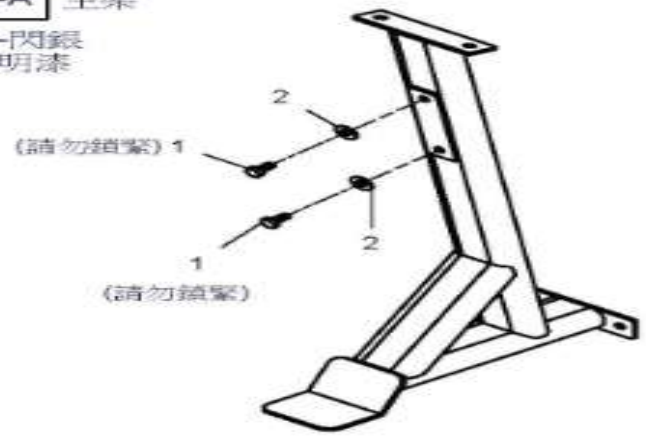	1SET	1.組立1/2'X1"L=2PCS 一般外六角頭螺絲 2.組立1/2"華司Ø34=2PCS
20MHE1900-B	扶手架 國寶O-200S-閃銀 國寶KL0158明漆 二塗二烤 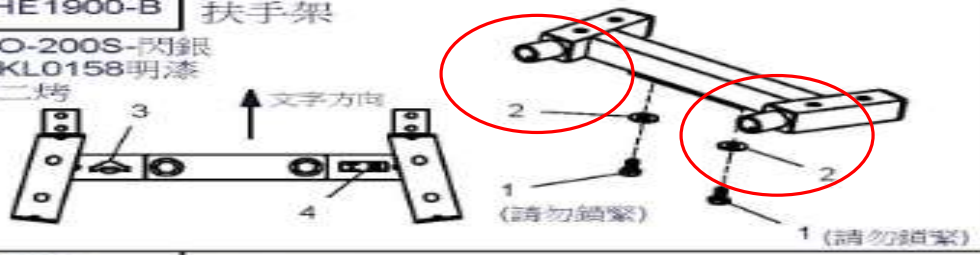	1SET	1.組立1/2'X1"L=2PCS 一般外六角頭螺絲 2.組立1/2"華司Ø34=2PCS 3.黏貼9440-055貼紙=1PCS 4.貼工單貼紙=1PCS
280266	扶手架 國寶K32027G深灰 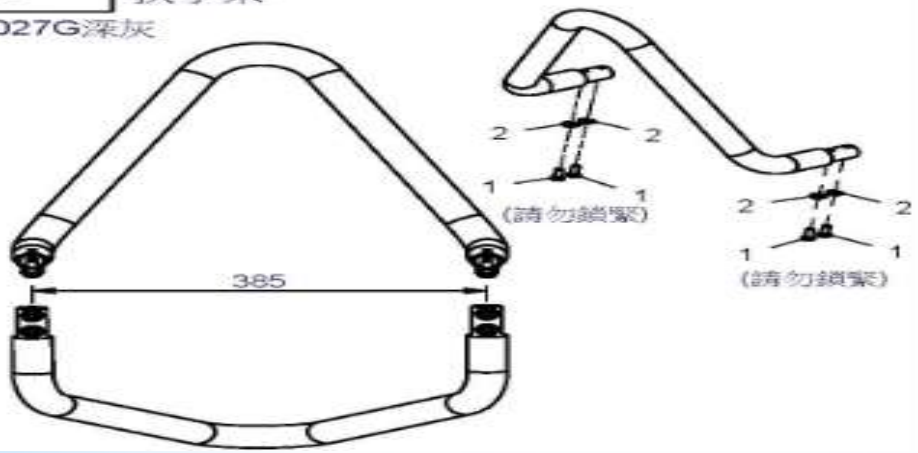	1SET	1.組立M8X20L =4PCS 半圓頭內六角螺絲 2.組立弧形華司M8=4PCS

零件代碼	品 名 及 圖 案	用量	備 註
20MHE1900-C 國麗O-200S-閃銀 國麗KL0158明漆 二塗二烤	腳踏板 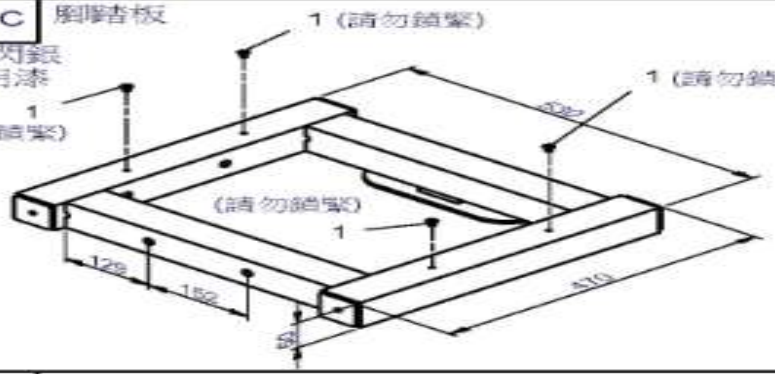	1SET	1.組立M6X12L=4PCS 錐形平頭內六角螺絲
20MHE1900-D1 國麗O-200S-閃銀 國麗KL0158明漆 二塗二烤	擺臂 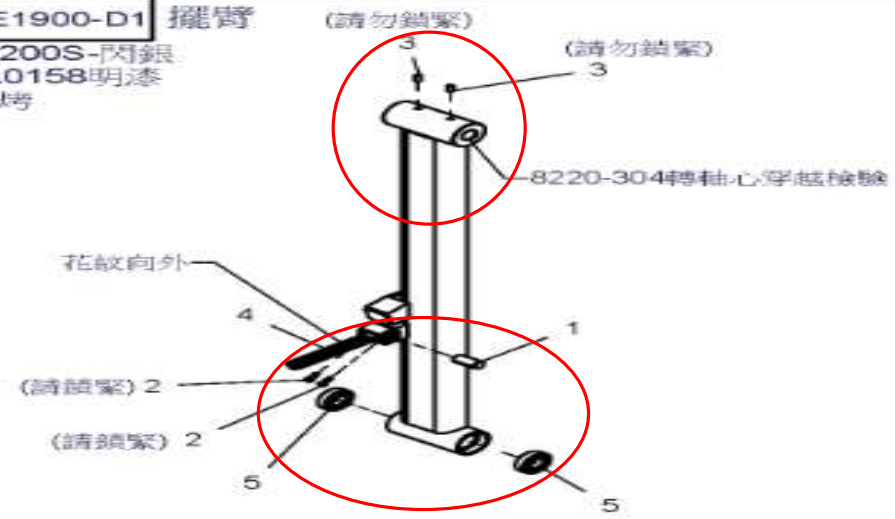	1SET	1.組立8210-162軸心=1PCS 2.組立M6X16L=2PCS 圓頭內六角螺絲-CAP 3.組立M8X16L=2PCS 圓頭內六角螺絲 4.組立FMHE1900A1平面帶 =1PCS 長度3710mm 5.組立8510-037軸承=2PCS 設變單號 2019030002  FMHE1900A1 3710mm-平面皮帶
20MHE1900-E 國麗O-200S-閃銀 國麗KL0158明漆 二塗二烤	連接桿 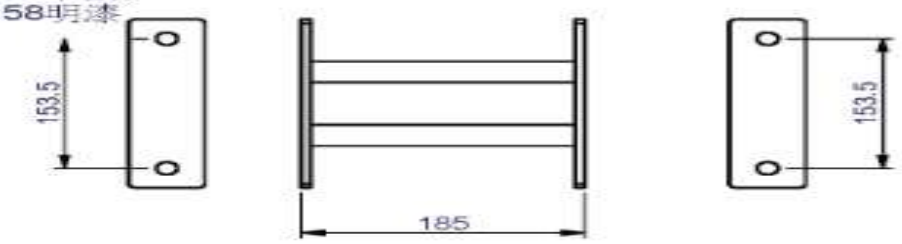	1SET	1.9630-213蜂巢紙=4PCS 35H60X35 2.9180-002保麗龍=2PCS 165X130X110mm 3.9180-009保麗龍=4PCS 150X80X80(無缺口) 4.9180-011保麗龍=2PCS 220X100X100(無缺口) 5.9630-009束帶=10PCS 7.5X2tX540L 6.9630-011氣泡袋=1PCS 1000X1000 7.9630-151氣泡袋=1PCS 205X900XB-平口 HLMHE1900A內箱

零件代碼	品 名 及 圖 案	用量	備 註
20MHE1900-F 國麗O-200S-閃銀 國麗KL0158明漆 二塗二烤	連接桿 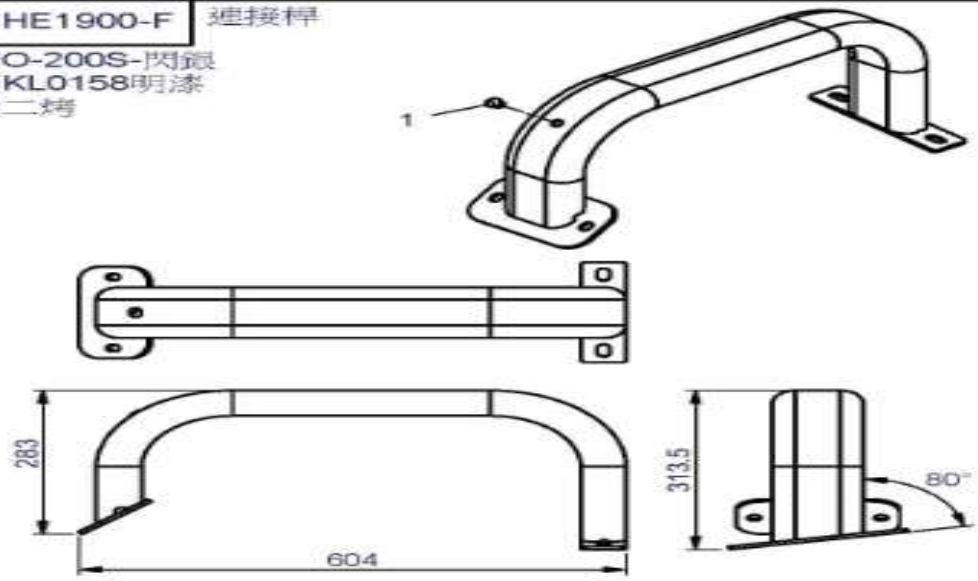	1SET	1.組立9211-061A端塞=1PCS
8220-304 染黑	轉軸心 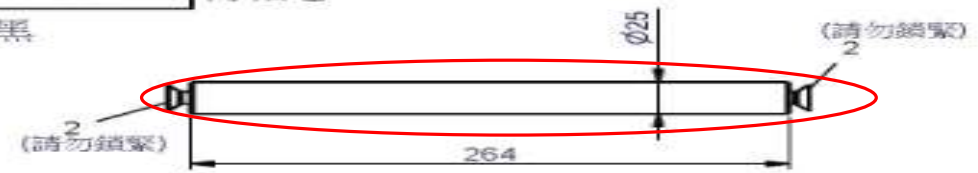	1SET	1.組立M10X25L=2PCS 錐形平頭內六角螺絲 HLMHE1900A內箱
8312-077 國麗O-200S-閃銀	固定片 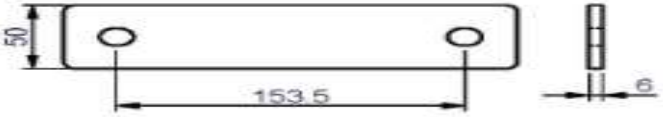	2PCS	HLMHE1900A內箱
8313-265 國麗O-200S-閃銀	腳踏板 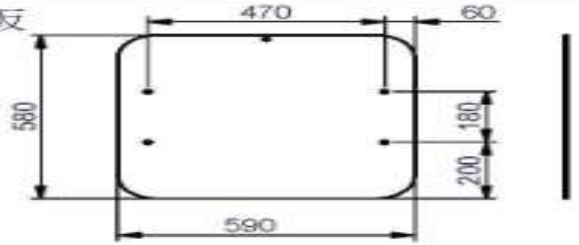	1PCS	

零件代碼	品 名 及 圖 案	用量	備 註
20MHE1900-H 國邦790-49153F1HT-淺灰	腳踏板 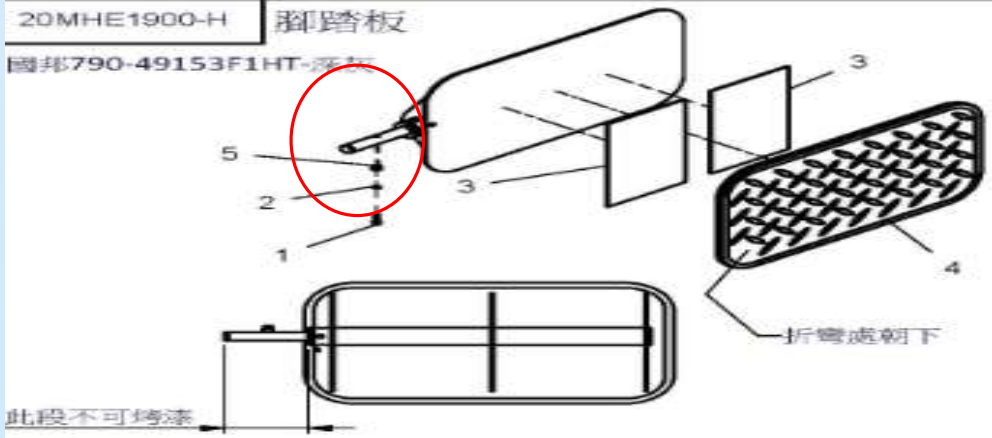	1SET	1.組立8X25L=1PCS 圓頭內六角-CAP螺絲 2.組立M8彈簧華司=1PCS 3.黏貼9190-002白色雙面膠=2PCS 4. 組立9310-067橡膠墊=1PCS 5.組立8110-168鐵套=1PCS Ø15.9XØ8.5X9t
9420-145	動作圖銘版	1PCS	1.9630-126氣泡=1PCS 160X460XB-平口 HLMHE1900A內箱
23MHE1900A	附件包	1SET	HLMHE1900A內箱
GMHE1900A	螺絲包	1SET	HLMHE1900A內箱
KMHE1900	說明書	1SET	
9310-095 橡膠	橡膠墊 	1PCS	設變單號 2019020002

零件代碼	品名及圖案	用量	備註
20MHE1900-G1	門框 國羅O-200S-閃銀 國羅KL0158明漆 二塗二烤 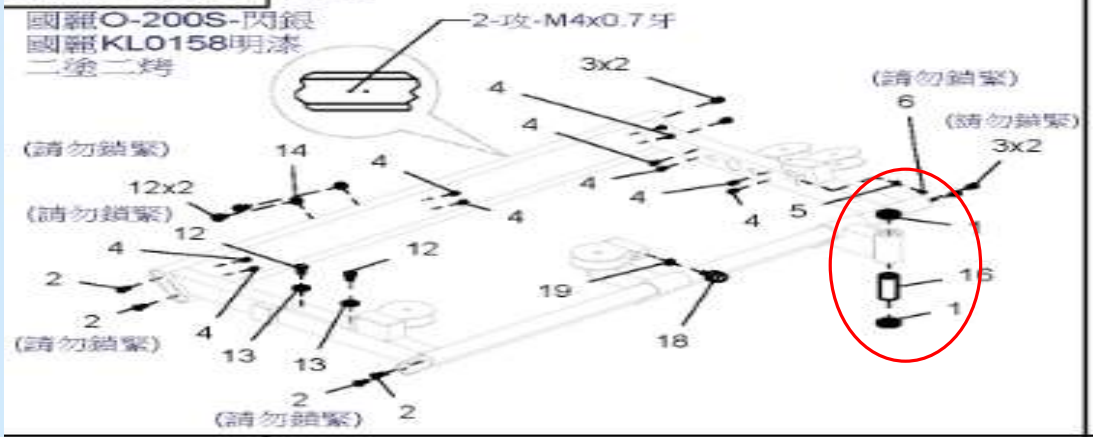	1SET	1.組立8510-018=2PCS 6005ZZ軸承 2.組立M10X25L=4PCS 錐形內六角螺絲 3.組立M10X12L=4PCS 圓頭內六角-CAP螺絲 4.M6拉鉚(身體有花)=16PCS 5.M6華司Ø13=1PCS 6.M6X12L=1PCS 半圓頭內六角螺絲 12.組立1/2"X1"L=4PCS 一般外六角螺絲 13.組立1/2"華司-Ø34=2PCS 14.組立1/2"華司-Ø25=2PCS 16.組立8130-482固定套=1PCS Ø38XØ25.5X106L 18.組立9310-018=1PCS 3/8"鉛襯墊 19.組立3/8"x8T螺帽=1PCS
9220-052	前護網-右 壓克力護網 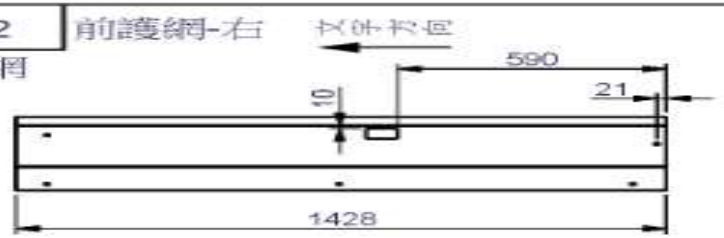	1PCS	1.貼9440-117防夾手貼紙=1PCS 設變單號 2019030002
9220-016	前護網-左 壓克力護網 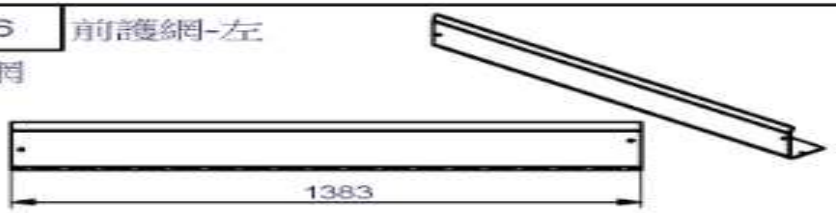	1PCS	

零件代碼	品 名 及 圖 案	用量	備 註
9220-023	護網 壓克力護網 透明黑 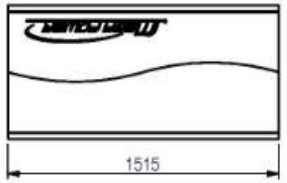	1PCS	
9211-148	上蓋 	1SET	1. 貼9441-370=2PCS 鋁標(Steelflex) H9211148內箱
8400-033	選擇上片 黑漆 	1SET	HLMHE1900B內箱
8210-216C	20孔選擇焊組 電鍍 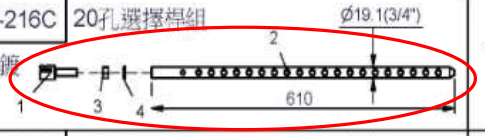	1SET	1.組立8260-076固定焊=1PCS 2.組立8210-216 20孔選擇焊=1PCS 3.組立1/2"螺帽=1PCS 4.組立1/2"彈簧華司=1PCS
8331-057	固定片 國顯O-200S-閃銀 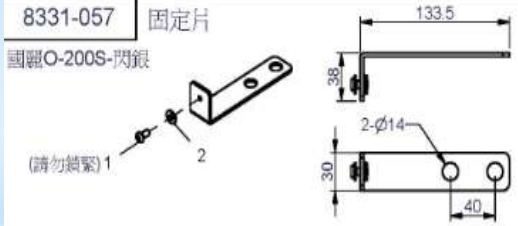	4SET	1.組立M6X12L=4PCS 半圓頭內六角螺絲 2.組立M6華司-Ø13=4PCS HLMHE1900B內箱
8313-169	固定片 電鍍 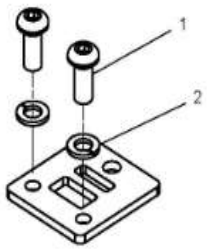	1PCS	1.組立M10X25L 半圓頭內六角螺絲=2PCS 2.組立M10彈簧華司=2PCS HLMHE1900B內箱

零件代碼	品 名 及 圖 案	用量	備 註
8331-058	固定片 國顯O-200S-閃銀 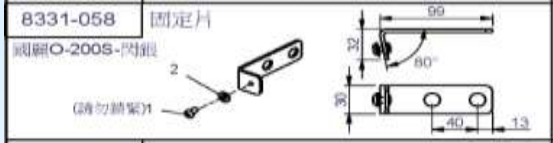	3SET	1.組立M6X12L 半圓頭內六角螺絲=3PCS 2.組立M6華司-Ø13=3PCS HLMHE1900B內箱
8313-144	固定片 國顯O-200S-閃銀 國顯KL0158明漆 二塗二烤 	2PCS	HLMHE1900B內箱
8311-117	固定片 國顯O-200S-閃銀 國顯KL0158明漆 二塗二烤 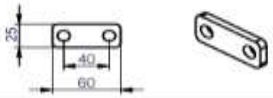	1PCS	HLMHE1900B內箱
8311-194	固定片 K32027G 深灰砂 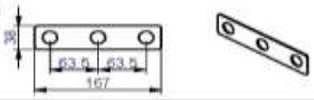	1PCS	HLMHE1900B內箱
8280-042	導桿 電鍍 Ø19.1 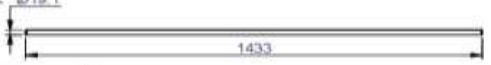	2PCS	設變單號 2019030002
23MHE1900B	附件包	1SET	HLMHE1900B內箱
23MDCUP	附件包-CUP	1SET	HLMHE1900B內箱
25MHE1900	皮帶輪包	1SET	HLMHE1900B內箱
GMHE1900B	螺絲包	1SET	HLMHE1900B內箱
8331-056	L型片 國顯O-200S-閃銀 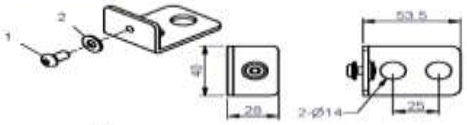	1SET	1.組立M6X12L=1PCS 半圓頭內六角螺絲 2.組立M6-Ø13=1PCS HLMHE1900B內箱
			1.9180-002保麗龍=8PCS 165X130X110H 2.9630-010 氣泡布=4PCS 45HX70X30 3. 9180-025特固龍=4PCS Ø48X28X75L 4.9630-009束帶=3PCS 7.5X2TX540L 5.9630-321緩衝紙=4PCS 85X30X50H 設變單號 2019030002

零件代碼	品名及圖案	用量	備註
9131-060	座墊 黑色耐寒乳膠皮	2SET	

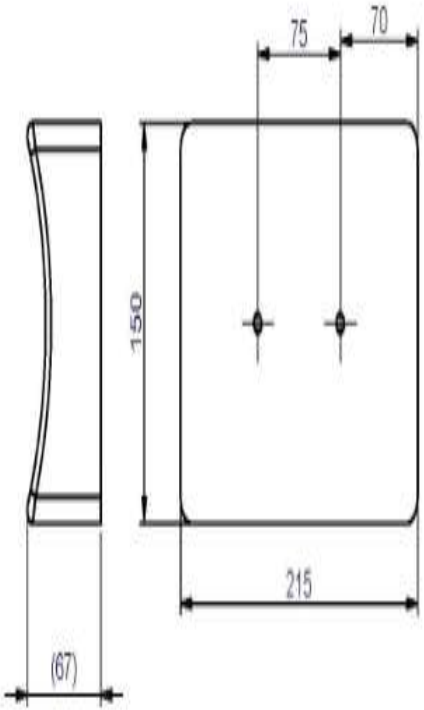

MHE1900 ASSEMBLY INSTRUCTIONS

HARDWARE ILLUSTRATION

D1.Ø60 CAP COVER(8130-231)---------- [2PCS]

D3.Ø38X26X1.5t CU WASHER(8520-008)---------- [2PCS]
D4.108X15tX263L RUBBER PAD(9310-075)---------- [1PCS]

D6.Ø115X50L PULLEY-NO MAGNET(9213-042B)---------- [4PCS]
D7.3710mm BELT (FMHE1900A1)---------- [1PCS]

D1.



D3.



D4.



D6.



D7.



MHE1900 ASSEMBLY INSTRUCTIONS

FARME HARDWARE ILLUSTRATION

DD1.Ø3/4" SHAFT COLLAR(9211-147)	[2PCS]
DD2.Ø4" RUBBER DOUNT(9310-017)	[2PCS]
DD3.108X14.5IX263L RUBBER PAD(9310-075)	[2PCS]
DD4.BOTTLE BRACKET(8388-025)	[1PCS]
DD5.BOTTLE RACK(9260-320)	[1PCS]
DD6.BOTTLE(9260-123)	[1PCS]
DD7.TOP PLATE(8400-033)	[1PCS]
DD8.Ø3/4" SHAFT COLLAR(9211-167)	[2PCS]
DD9.WEIGHT SELECTOR BAR(8210-216C)	[1PCS]

DD1.



DD2.



DD3.



DD4.



DD5.



DD6.



DD7.



DD8.



DD9.



MHE1900 ASSEMBLY INSTRUCTIONS

PARTS ILLUSTRATION SHEET

A [1SET]

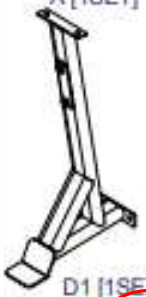

B [1SET]



C [1SET]

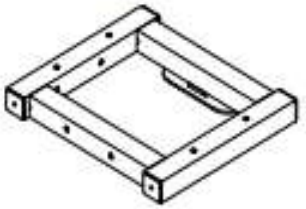

D1 [1SET]

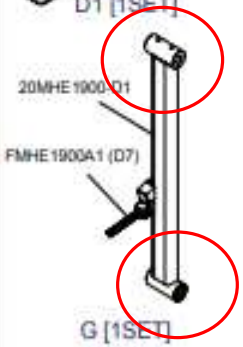

E [1SET]

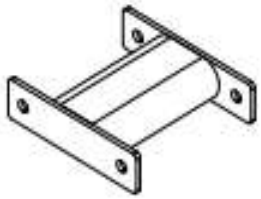

F [1SET]



G [1SET]
280266



H [1SET]
8220-304
Ø25X264L



I [2PCS]
8312-077



J [1PCS]
8313-265

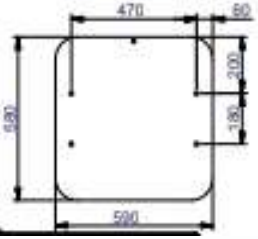

K [1PCS]
9310-095



L [1SET]
9420-145

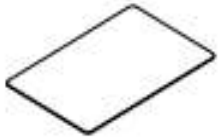

PARTS ILLUSTRATION SHEET

M [2SET]
9131-060



Q [1SET]
20MHE1900-H



FARME PARTS ILLUSTRATION SHEET

AA1 [1SET]
20MHE1900-G1

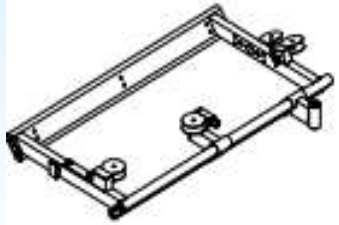

AC [1PCS]
9220-016

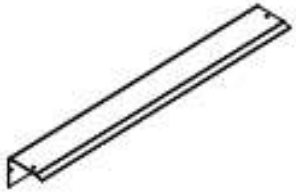

AD1 [1PCS]
9220-052



AE [1SET]
9220-023

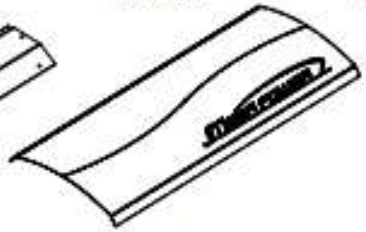

AF [1SET]
9211-148



AG [4SET]
8331-057



AH [1SET]
8313-169



AJ[2PCS]
8280-042
Ø3/4"X1433L



AK[1PCS]
8331-056



AL[3SET]
8331-058



MHE1900 ASSEMBLY INSTRUCTIONS

FARME PARTS ILLUSTRATION SHEET

AM [2PCS]
8313-144



AP [1PCS]
8311-117

AQ [1PCS]
8311-194

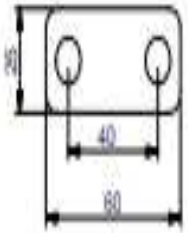

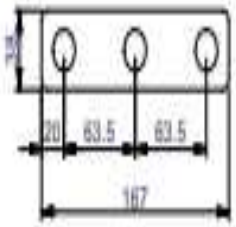

MHE1900 ASSEMBLY INSTRUCTIONS

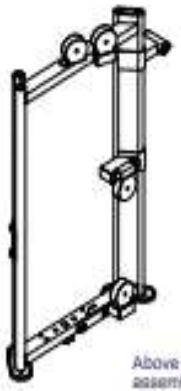

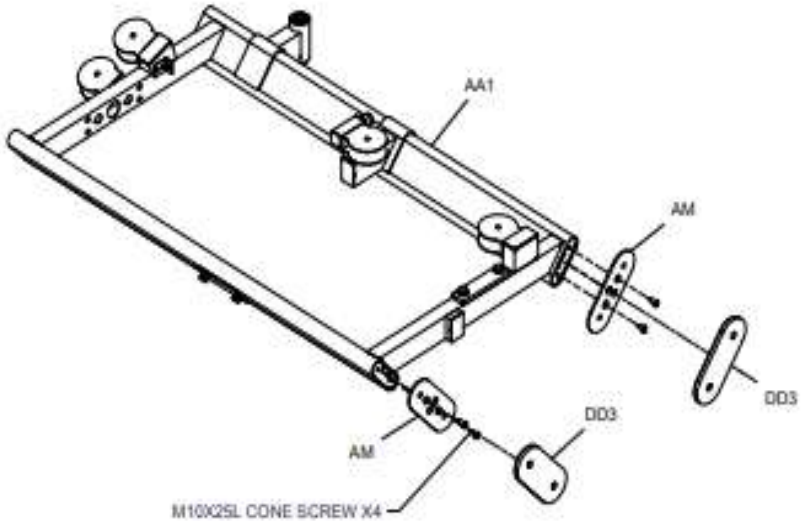

MHE1900 ASSEMBLY INSTRUCTIONS

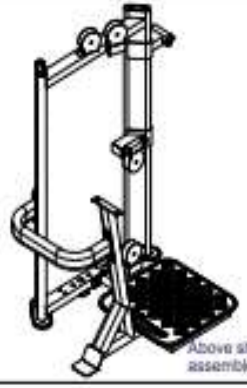

Above shows STEP 2
assembled and completed

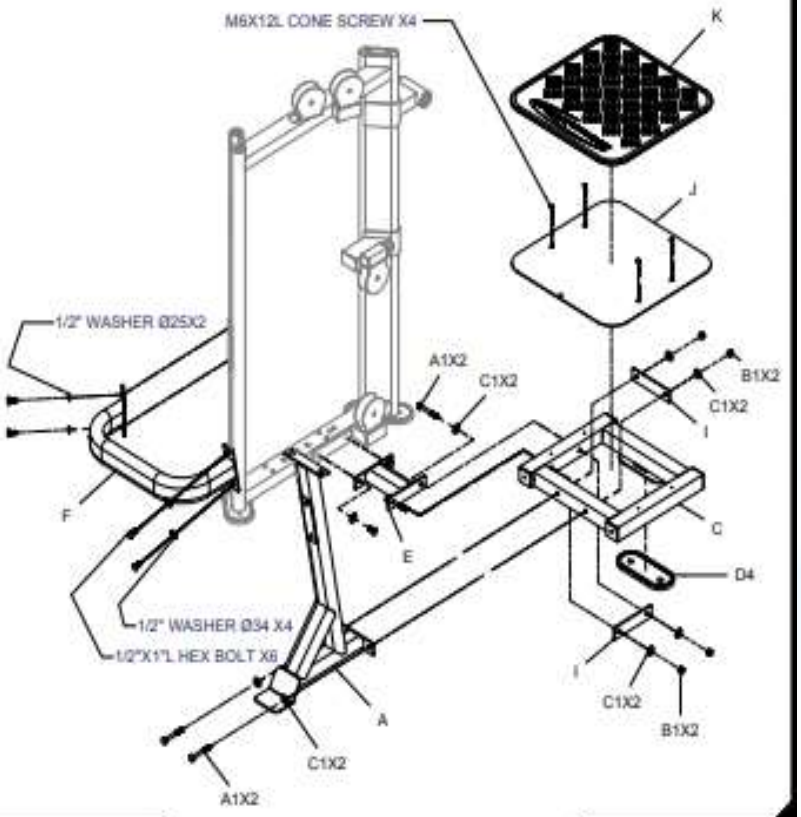

MHE1900 ASSEMBLY INSTRUCTIONS



Above shows STEP 3
assembled and completed

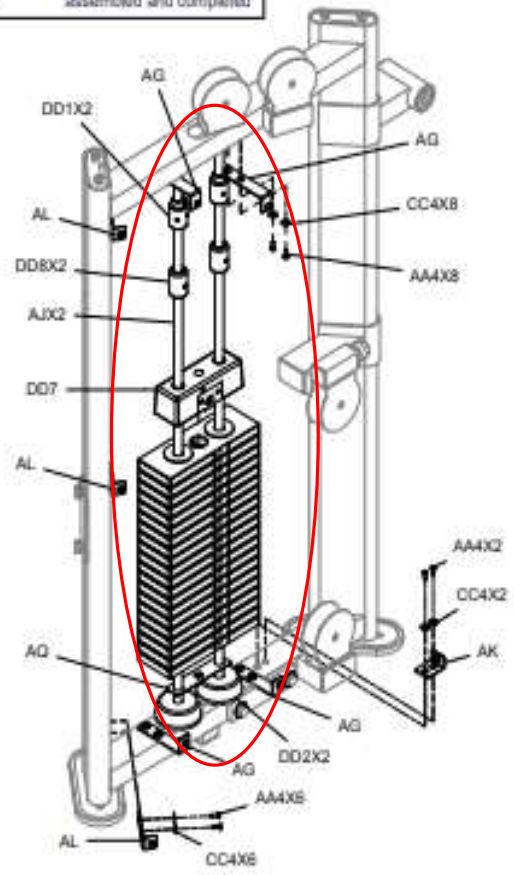

MHE1900 ASSEMBLY INSTRUCTIONS

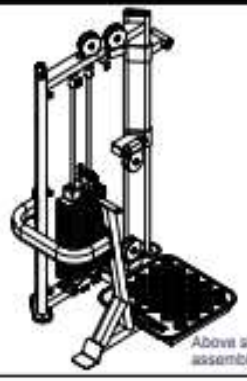

Above shows STEP 4 assembled and completed

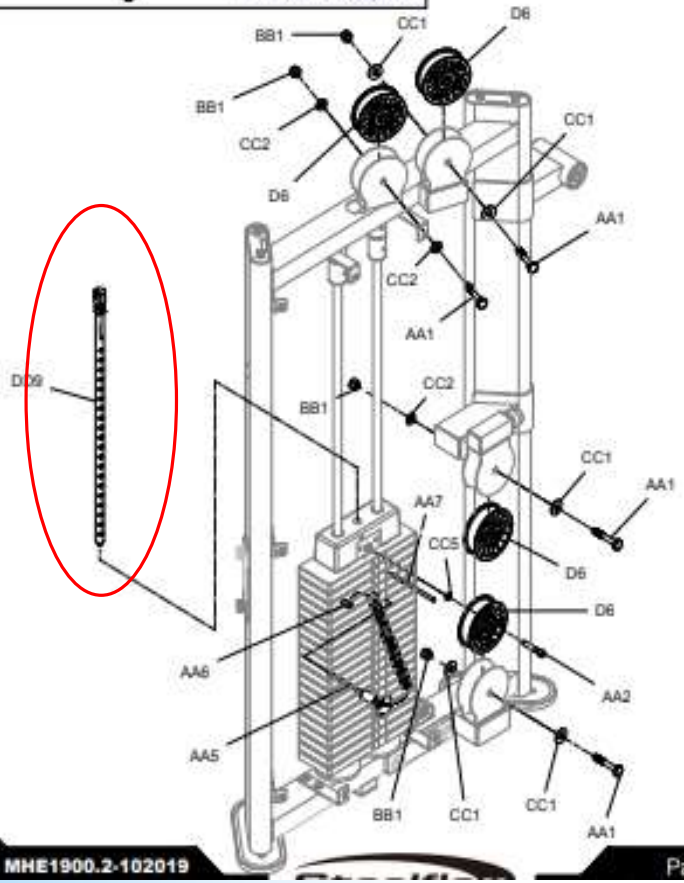

MHE1900 ASSEMBLY INSTRUCTIONS

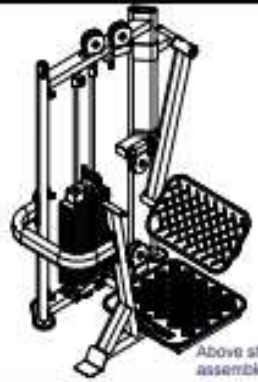

Above shows STEP 5 assembled and completed

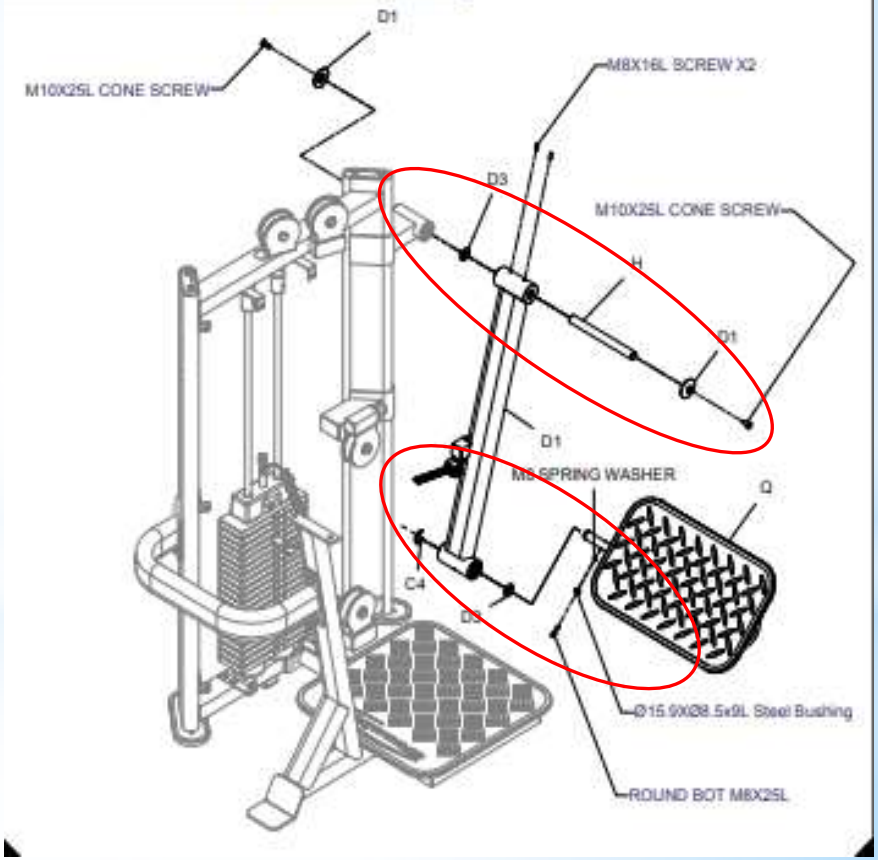

MHE1900 ASSEMBLY INSTRUCTIONS

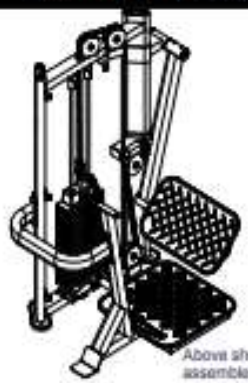

Above shows STEP 6 assembled and completed

The tread side should be outward

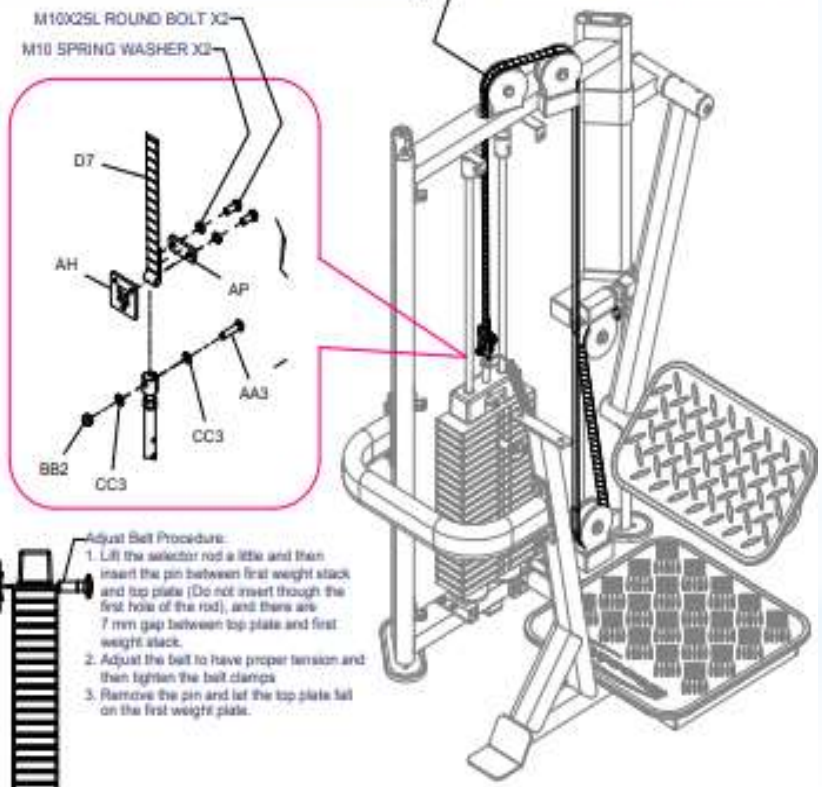

Adjust Belt Procedure:
1. Lift the selector rod a little and then insert the pin between first weight stack and top plate (Do not invert though the first hole of the rod), and there are 7 mm gap between top plate and first weight stack.
2. Adjust the belt to have proper tension and then tighten the belt clamps
3. Remove the pin and let the top plate fall on the first weight plate.

MHE1900 ASSEMBLY INSTRUCTIONS

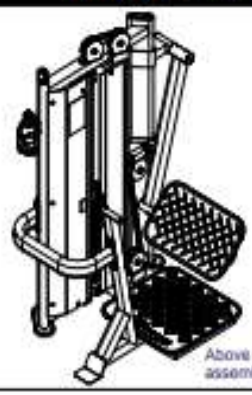

Above shows STEP 7 assembled and completed

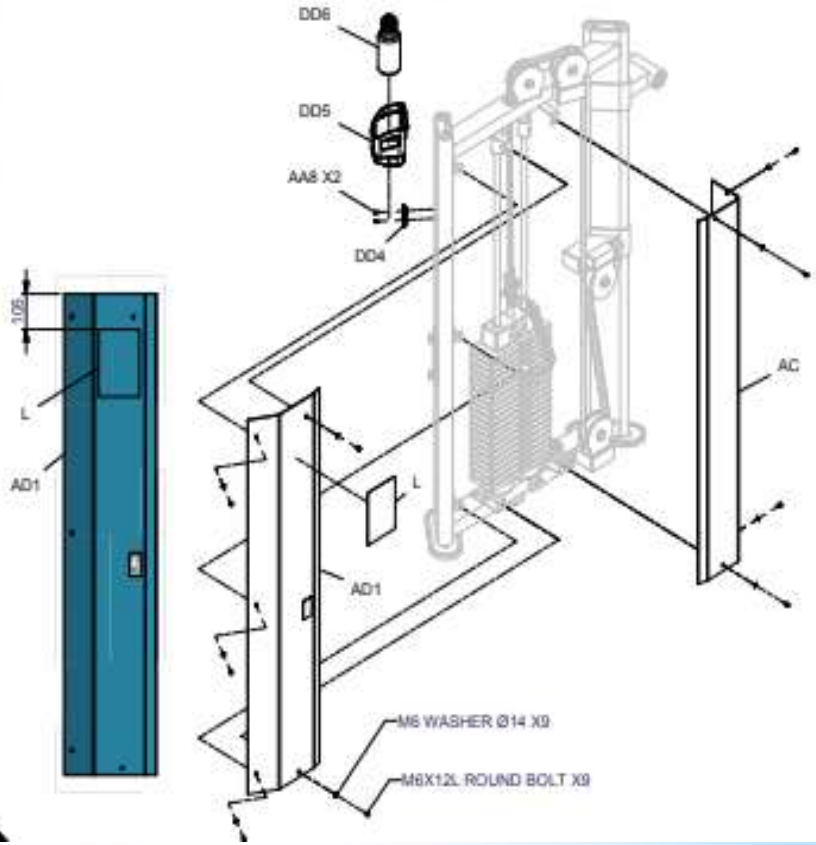

MHE1900 ASSEMBLY INSTRUCTIONS

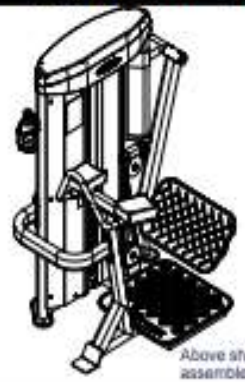

Above shows STEP 8 assembled and completed

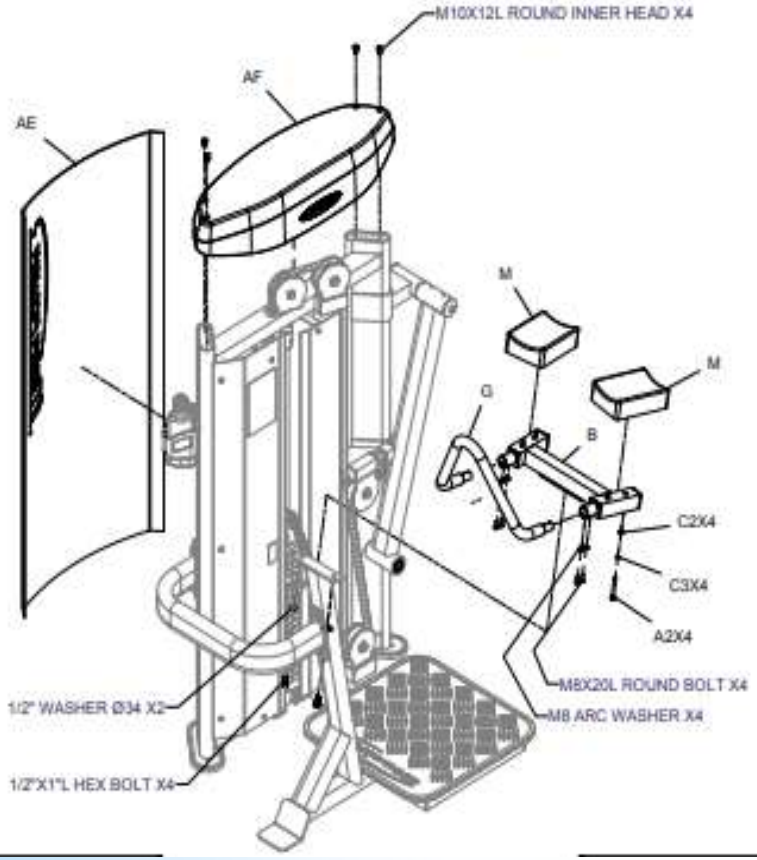

MEGA POWER series
JUNGLE GYM series

project	Part number	Name	Specification	Quantity	Remark
1	38-200 CAP	round allen head	3/8"X2"L round allen head-CAP	1	
2	38-SPWAS 8732003	3/8" spring washer		1	
3	8210-216C	20 hole Selector Rod		1	
4	8250-166	pin	Ø7.9X137L	1	
5	8250-162	weight stack pin	Ø7X110L	1	
6	8400-010	10LB weight stack plate	102x22hx280L 10LB	20	
7	8400-033	top plate		1	

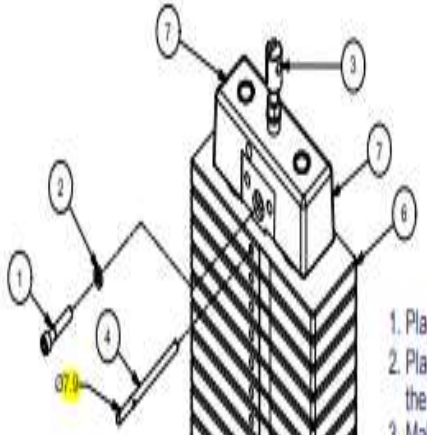

1. Place #4 - 8250-166 (pin) into the first weight plate.
2. Place #5 - 8250-162 (weight stack pin) into the the hole 20th of the weight stack.
3. Make sure #7 (top plate) cling to #6 (first weight plate) and fix in #1 - 3/8"X2"L screw and #2 - 3/8" spring washer.
4. Finally remove #5 - 8250-162 (weight stack pin) and use as usual.

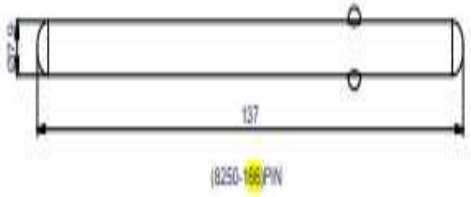

8250-166 PIN

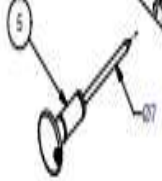

V2-112017

Guide on Selector Rod Adjustment

STEP 1



Step 1
Place Selector Rod into Top Plate.
Then put selector pin into the weight plate to fix the rod.

STEP 2

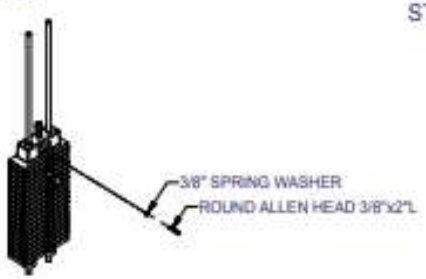

Step 2
Screw the 3/8"x2"L Round Allen Head into Top Plate but not tighten it up.

STEP 3



Step 3
Place the selector pin to each weight plate (5,10,15,20....) to check the smoothness.

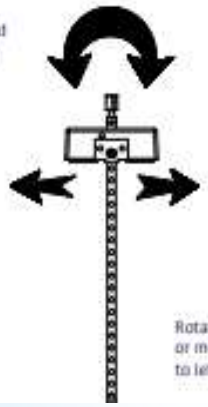

Rotate the Selector Rod slightly or move the 3/8"x2"L Round Allen Head to left and right and repeat Step 3.

ASSEMBLY INSTRUCTIONS

Adjust Flat Belt Steps

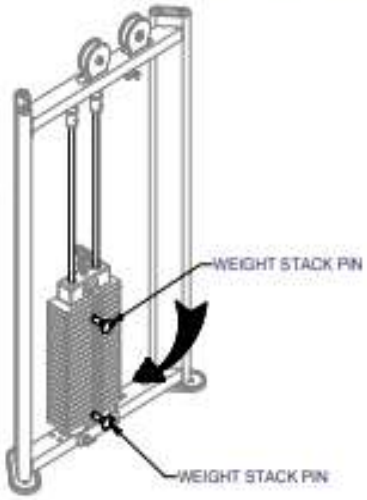

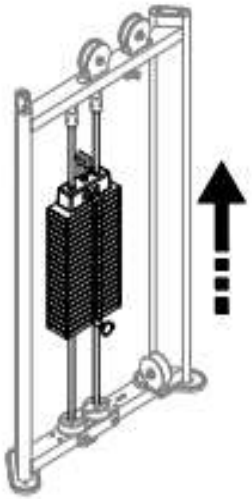

1. When installing flat belt, please put the weight stack pin into 4th weight stack. After installing flat belt, please put the weight stack pin into 20th weight stack.

2. When weight stack pin put into 20th weight stack, please do workout with the machine around 1 minute or 5-10 sets in order to extend the flat belt,flat belt will be loosed a little bit.

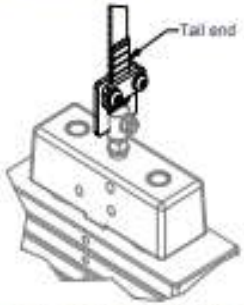

3. Pull end of flat belt as drawing showed to make the flat belt be tightened. (After using the machine 3 months to 6 months, please check flat belt.If the flat belt is loosed, please follow this step to tighten the belt again.)

*Well done!

