*MLP500 Maintenance



* Customers can put some grease on pivot points(red circle place), with brass or gunmetal bushings.





* Let's maintain your machine!

零件代碼	品名及圖案	用量	備註
20MLP500-A	主架 依定單需求 MLP-500：國麗0-200S-閃銀 國麗KL-0109-透明 二塗二烤 MLP-500W：國邦-亮光白色770-2263TL 8370-037 腳踏板 國邦790-49153F1HT-深灰 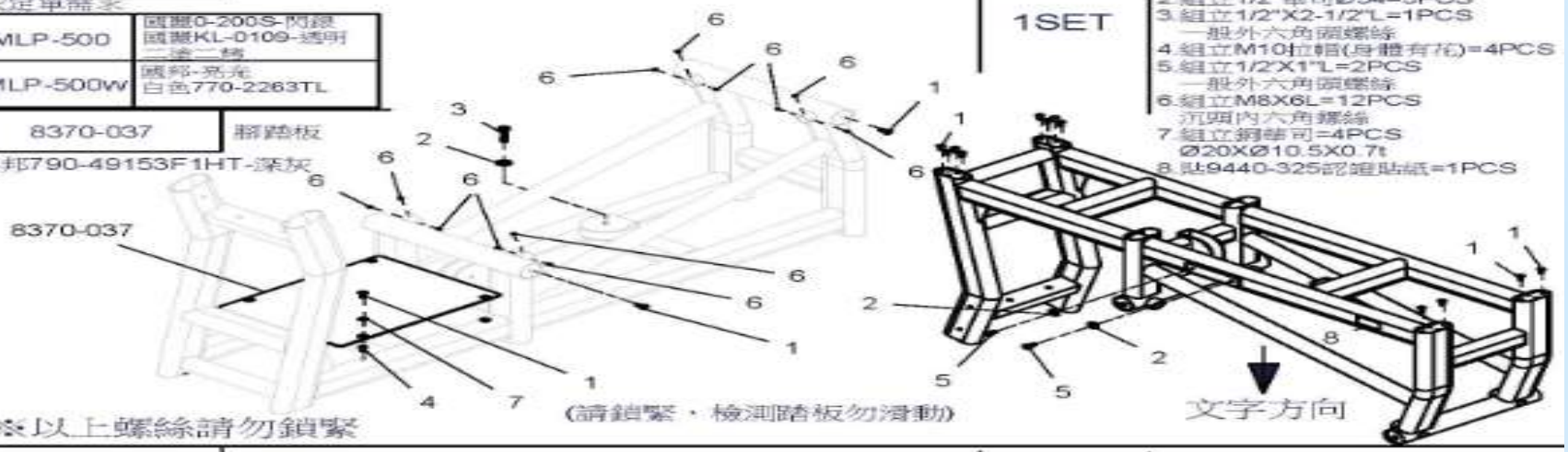 ※以上螺絲請勿鎖緊 (請鎖緊，檢測踏板勿滑動) 文字方向	1SET	1.組M10X25L=20PCS 錐形內六角螺絲 2.組立1/2"華司Ø34=3PCS 3.組立1/2"X2-1/2"L=1PCS 一般外六角頭螺絲 4.組立M10拉鉚(身體有花)=4PCS 5.組立1/2"X1"L=2PCS 一般外六角頭螺絲 6.組立M8X6L=12PCS 沉頭內六角螺絲 7.組立鋼華司=4PCS Ø20XØ10.5X0.7t 8.貼9440-325認證貼紙=1PCS
20MLP500-B	連接桿 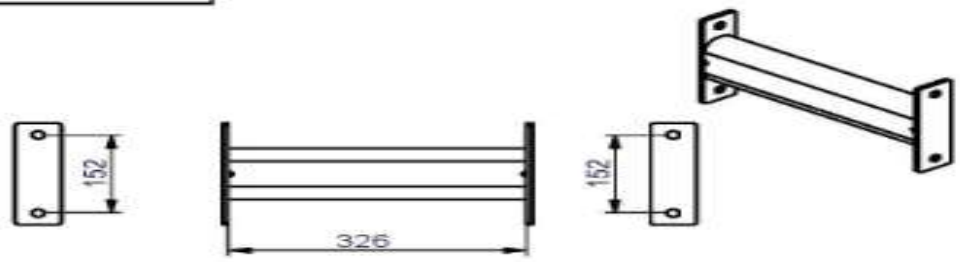 	1SET	依定單需求 MLP-500：國麗0-200S-閃銀 國麗KL-0109-透明 二塗二烤 MLP-500W：國邦-亮光白色770-2263TL
20MLP500-D	連接桿 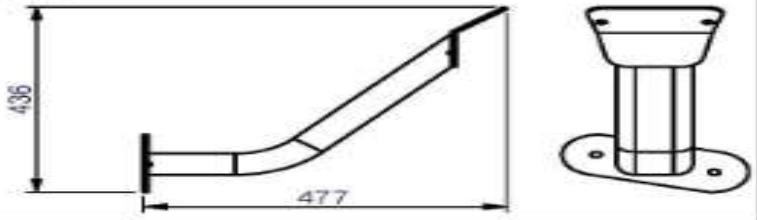 	1SET	依定單需求 MLP-500：國麗0-200S-閃銀 國麗KL-0109-透明 二塗二烤 MLP-500W：國邦-亮光白色770-2263TL
8280-022 鍍硬鉻	導桿 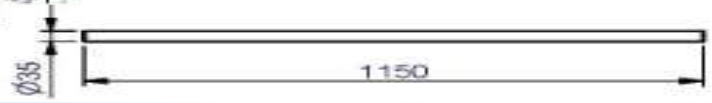 	2PCS	

零件代碼	品 名 及 圖 案	用量	備 註
20MLP500-C 20MLP500-E	門框	1SET	1.組立8110-059固定套=1PCS 2.組立8130-250束子=2PCS 3.組立8250-121調整組=1PCS 4.組立8313-167固定片=1PCS 5.組立8510-012軸承=16PCS 6.組立8530-024固定軸套=16PCS 7.組立8890-006鎖套=2PCS 8.組立9162-109=2PCS PVC浸漬把手 Ø24X5ØX175L 9.組立9211-107雙層套=2PCS 10.組立9211-008長方套=1PCS 11.組立9266-025導輪=8PCS 12.組立9310-018 3/8"頂溜輪=1PCS 13.組立9310-079橡膠墊=2PCS 14.組立5/16"X3/4"L=1PCS 圓頭內六角螺絲-CAP 15.組立M10X15-CAP螺絲=2PCS 16.組立M10彈簧華司=4PCS 18.貼9440-055台灣貼紙=1PCS 19.組立M10X25L=2PCS 半圓頭內六角螺絲 20.組立5/16"X1-1/2"L=1PCS 圓頭內六角螺絲-CAP 21.組立1/2"X3"L=8PCS 一般外六角頭螺絲 22.組立1/2"尼龍=6PCS 23.組立1/2"華司-Ø25=14PCS 24.組立3/16"X3/16"沉頭螺絲=8PCS 25.貼工率貼紙
8313-167	固定片X1PCS		
20MLP500-G 電鍍	扶手架	1SET	1.組立M10X20L=2PCS 半圓頭內六角螺絲 2.M10彈簧華司=2PCS 3.M10華司Ø-27=2PCS HLMLP500A內箱
8240-092 電鍍	調整棒	1SET	1.組立9212-061=1PCS PVC浸漬Ø15XØ21X150L HLMLP500A內箱

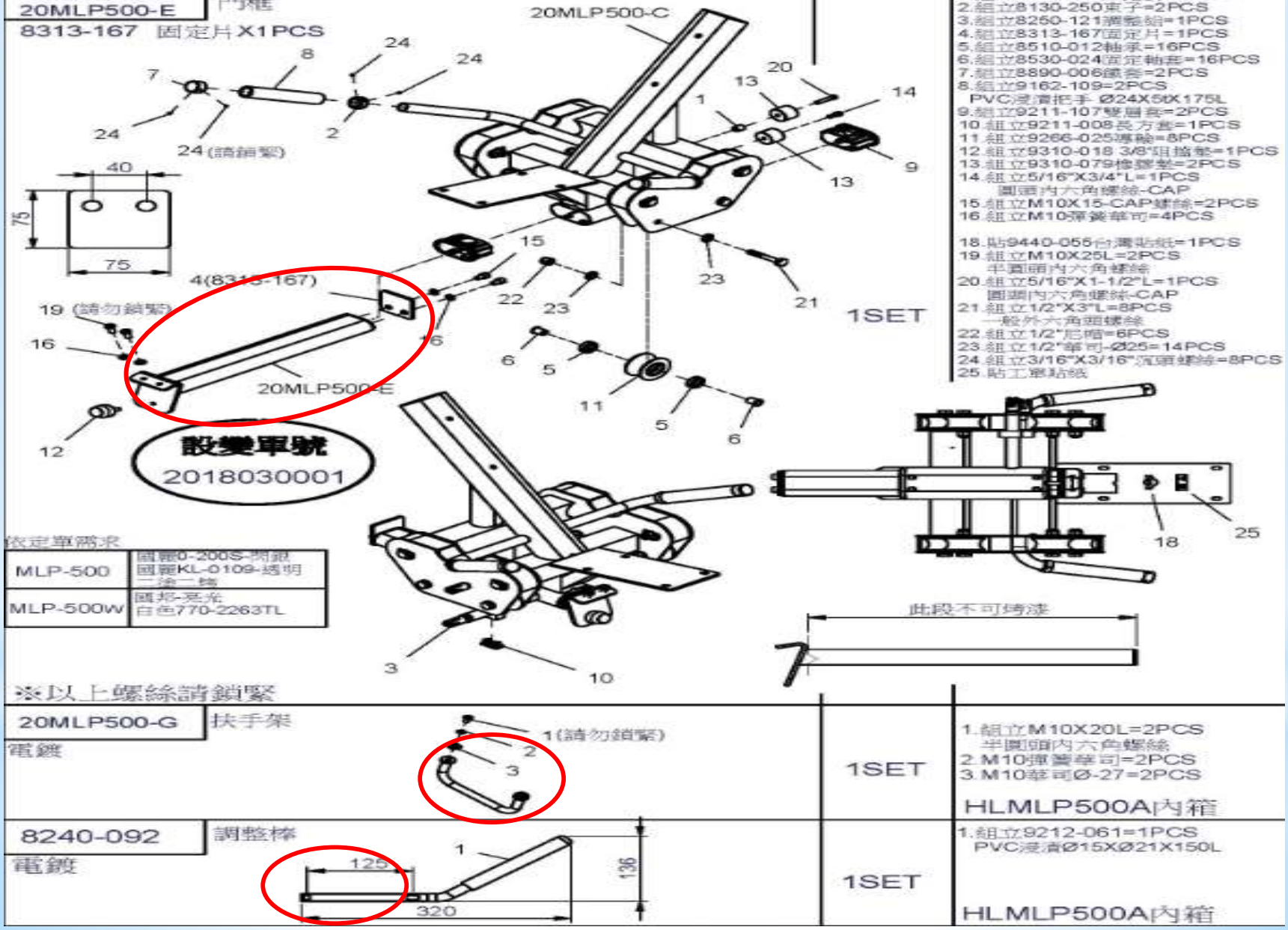

零件代碼	品 名 及 圖 案	用量	備 註
20MLP500-F1 國邦790-49153F1HT-深灰	腳踏板 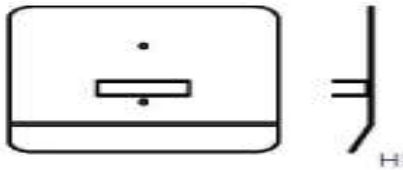 HLMLP500A內箱	1SET	設變單號 2018030001
8311-117	固定板 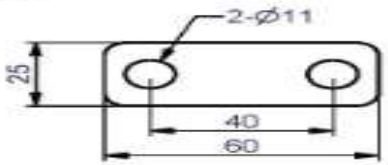 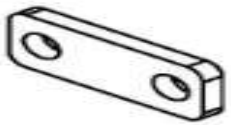 HLMLP500A內箱	2PCS	依定單需求 MLP-500：國產0-200S-閃銀 國產KL-0109-透明 二邊二槽 MLP-500W：國邦-亮光 白色770-2263TL
8313-144	固定板  HLMLP500A內箱	4PCS	依定單需求 MLP-500：國產0-200S-閃銀 國產KL-0109-透明 二邊二槽 MLP-500W：國邦-亮光 白色770-2263TL
9420-101	動作圖銘板	1PCS	1.9630-126氣泡袋=1PCS 160X460XB-平口 HLMLP500A內箱
23MLP500A	附件包	1SET	HLMLP500A內箱
23MLP500WA	附件包		
25MLP500A	皮帶輪包 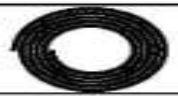	1SET	HLMLP500A內箱
FMLP500A	皮帶包	1SET	HLMLP500A內箱
GMLP500A	螺絲包	1SET	HLMLP500A內箱
KMLP500	說明書	1SET	HLMLP500A內箱

零件代碼	品 名 及 圖 案	用量	備 註
	總組立圖 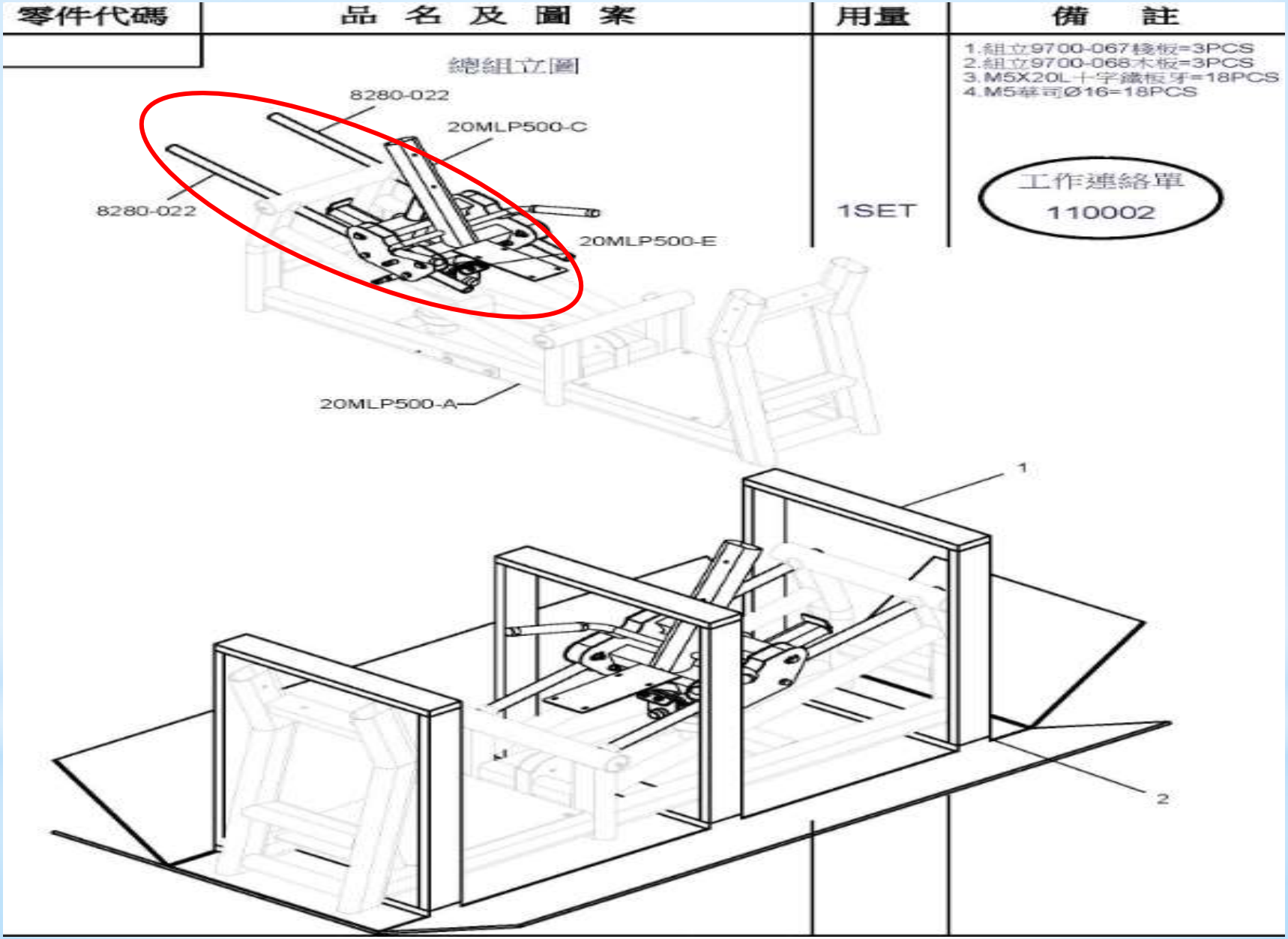 	1SET	1.組立9700-067棧板=3PCS 2.組立9700-068木板=3PCS 3.M5X20L十字鐵板牙=18PCS 4.M5華司Ø16=18PCS 工作連絡單 110002

零件代碼	品名及圖案	用量	備註
6610-012	門框 依定單需求 MLP-500 國產0-200S-閃銀 國產KL-0109-透明 一邊一桿 MLP-500W 國邦-亮光 白色770-2263TL 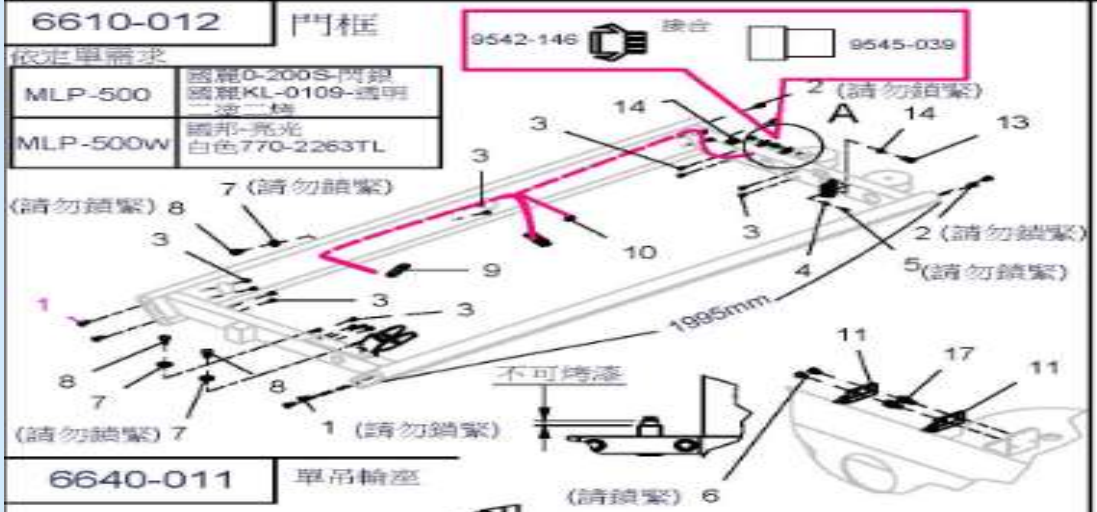	1SET	1.組立M10X25L=5PCS 錐形內六角螺絲 2.組立M10X12L=4PCS 圓頭內六角-CAP螺絲 3.組立M6位帽(身體有花)=16PCS 4.組立M6華司Ø13=1PCS 5.組立M6X12L=1PCS 半圓頭內六角螺絲 6.組立M3X6L=2PCS 半圓頭十字螺絲 7.組立1/2"華司-Ø25=4PCS 8.組立1/2"X1"L=4PCS 一般六角頭螺絲 9.組立9542-145=1PCS 訊號線(下段) 10.組立9542-146=1PCS 訊號線 11.組9545-039磁簧感應線=1PCS 12.組立9260-023 配線固定座=1PCS 13.組立M10X25L=2PCS 半圓頭內六角螺絲 14.組立M10彈簧華司=2PCS 15.組立8130-231端蓋=1PCS 16.組立8520-008網管可=2PCS 17.組立9215-021=2PCS 塑膠螺柱 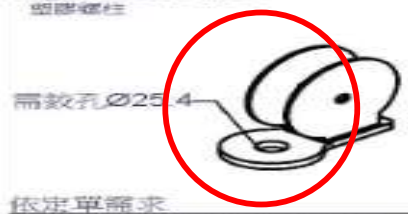 依定單需求 MLP-500 國際0-200S-閃銀 國產KL-0109-透明 一邊一桿 MLP-500W 國邦-亮光 白色770-2263TL
6640-011	單吊輪座 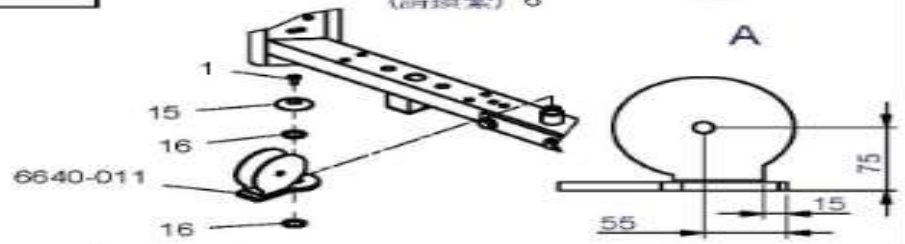		
9220-022	前護網-右 壓克力護網 透明黑 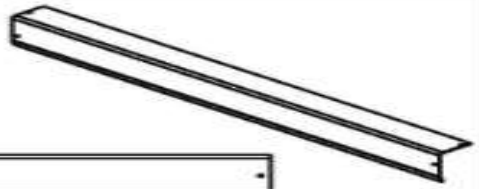 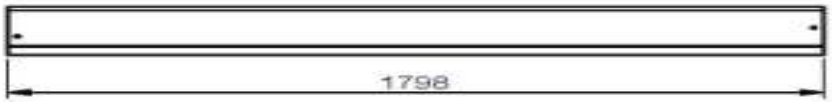	1PCS	
9220-021	前護網-左 壓克力護網 透明黑 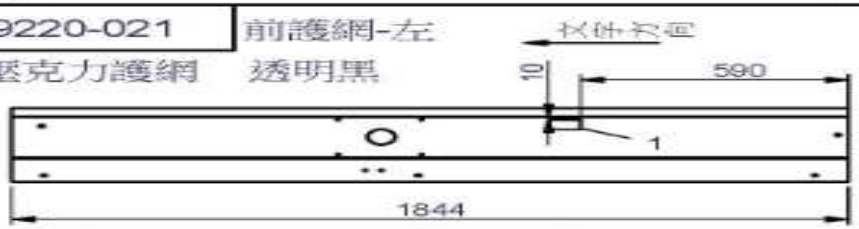	1PCS	1.貼9440-117防夾手貼紙=1PCS

零件代碼	品 名 及 圖 案	用量	備 註
9220-024 克力護網	護網 透明黑 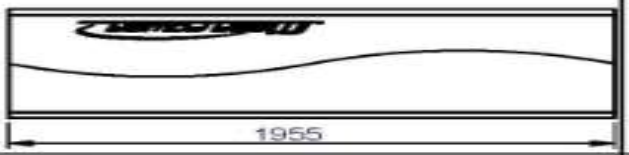	1PCS	
9211-148	上蓋 	1SET	1. 貼9441-370=2PCS 鋁標(Steelflex) H9211148內箱
8400-033	選擇上片 	1SET	HLMLP500B內箱
8210-216C 鍍	20孔選擇桿組 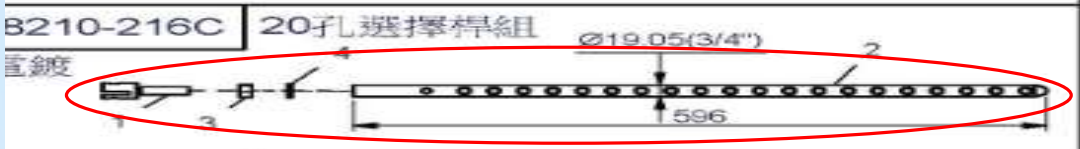	1SET	1.組立8260-076固定桿=1PCS 2.組立8210-216 20孔選擇桿=1PCS 3.組立1/2"螺帽=1PCS 4.組立1/2"彈簧華司=1PCS
8331-057	固定片  HLMLP500B內箱	4SET	1.組立M6X12L=4PCS 半圓頭內六角螺絲 2.組立M6華司-Ø13=4PCS 依定單需求 MLP-500 國藥0-200S-閃銀 MLP-500W 國邦-亮光 白色770-2263TL
8313-169 鍍	固定片  HLMLP500B內箱	1PCS	1.組立M10X25L 半圓頭內六角螺絲=2PCS 2.組立M10彈簧華司=2PCS 設變單號 2016010001

零件代碼	品名及圖案	用量	備註
331-058	固定片 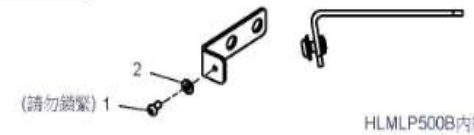 HLMLP500B內箱	2SET	1.組立M6X12L=2PCS 半圓頭內六角螺絲 2.組立M6華司-Ø13=2PCS 依定單需求 MLP-500 國麗0-200S-閃銀 MLP-500W 國邦-亮光 白色770-2263TL
313-144	固定片  HLMLP500B內箱	2PCS	依定單需求 MLP-500 國麗0-200S-閃銀 國麗KL-0109-透明 二塗二烤 MLP-500W 國邦-亮光 白色770-2263TL
331-056	L型片 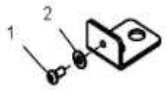 HLMLP500B內箱	1SET	1.組立M6X12L 半圓頭內六頭螺絲=1PCS 2.組立M6-Ø14=1PCS 依定單需求 MLP-500 國麗0-200S-閃銀 MLP-500W 國邦-亮光 白色770-2263TL
311-117	固定片 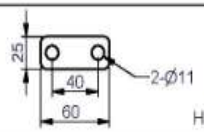 HLMLP500B內箱	3PCS	依定單需求 MLP-500 國麗0-200S-閃銀 國麗KL-0109-透明 二塗二烤 MLP-500W 國邦-亮光 白色770-2263TL
280-043	導桿 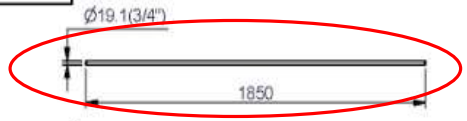	2PCS	設變單號 2017040003 Ø3/4"X1850L
MLP500B	附件包	1SET	HLMLP500B內箱
MDCUP	附件包-CUP	1SET	HLMLP500B內箱
MLP500B	皮帶輪包	1SET	HLMLP500B內箱
MLP500B	螺絲包	1SET	HLMLP500B內箱
MLP500B	皮帶包	1SET	HLMLP500B內箱
KMD	操作手冊	1SET	HLMLP500B內箱

零件代碼	品名及圖案	用量	備註
6640-009	單吊輪座  HLMLP500B內箱	1SET	1.組立M10X25L 半圓頭內六角螺絲=2PCS 2.組立M10彈簧華司=2PCS 依定單需求 MLP-500 國麗0-200S-閃銀 國麗KL-0109-透明 二塗二烤 MLP-500W 國邦-亮光 白色770-2263TL
6640-022 國麗3124S-閃銀	固定架 	1SET	1.組立M6X12L 半圓頭內六角螺絲=1PCS 2.組立M6華司-Ø13=1PCS HLMLP500B內箱

零件代碼	品名及圖案	用量	備註
9121-072	座墊 黑色耐寒乳膠皮 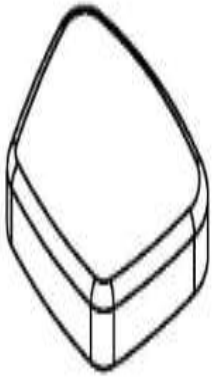	1SET	
9111-070	背墊 黑色耐寒乳膠皮 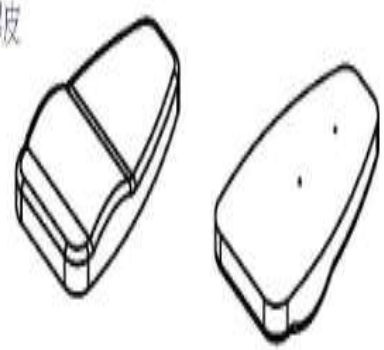	1SET	

零件代碼	品名及圖案	用量	備註
9121-072R	座墊 紅色耐寒乳膠皮 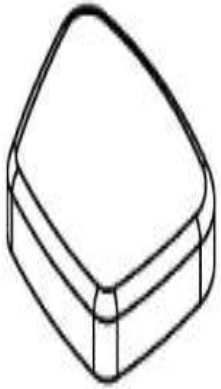	1SET	
9111-070R	背墊 紅色耐寒乳膠皮 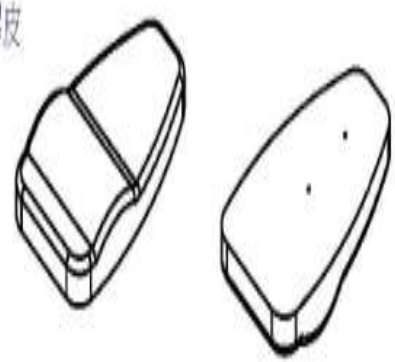	1SET	

MLP500 ASSEMBLY INSTRUCTIONS

HARDWARE ILLUSTRATION

D1.Ø76 CAP COVER(8130-236)----------[4PCS]
D2.Ø10X60L SHAFT(8210-156)----------[1PCS]
D3.58X116X2.5tX30H END CAP(9211-189)----------[2PCS]
D4.50X100X1.5t END CAP(9261-060)----------[1PCS]
D5.108X15tX263L RUBBER PAD(9310-075)----------[4PCS]
D6.Ø115X50L PULLEY(9213-042B)----------[2PCS]
D7.GRIP TAPE(9440-202)----------[1PCS]
D8.3265mm BELT(FMLP500A)----------[1PCS]

D1.



D2.



D3.



D4.



D5.



D6.



D7.



D8.



MLP500 ASSEMBLY INSTRUCTIONS

FARME HARDWARE ILLUSTRATION

DD1.Ø3/4" SHAFT COLLAR(9211-147)----------[2PCS]
DD2.Ø4" RUBBER PAD(9310-017)----------[2PCS]
DD3.108X14.5tX263L RUBBER PAD (9310-075)----------[2PCS]

DD5.Ø115X50L PULLEY(9213-042B)----------[4PCS]
DD6.BOTTLE BRACKET(8388-025)----------[1PCS]
DD7.BOTTLE HOLDER(9260-320)----------[1PCS]
DD8.BOTTLE(9260-123)----------[1PCS]
DD9.2520mm BELT(FMLP500B1)----------[1PCS]
DD12.TOP PLATE(8400-033)----------[1PCS]
DD13.Ø3/4" SHAFT COLLAR(9211-167)----------[2PCS]
DD14.WEIGHT SELECTOR BAR(8210-216C)----------[1PCS]

DD1.



DD2.



DD3.



DD5.



DD6.



DD7.



DD8.



DD9.

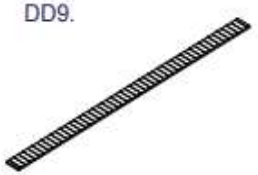

DD12.



DD13.



DD14.



MLP500 ASSEMBLY INSTRUCTIONS

PARTS ILLUSTRATION SHEET

A [1SET]

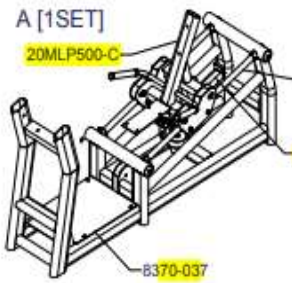

B [1SET]

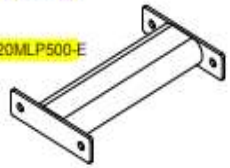

C [2SET]
8311-117

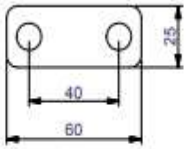

D [1SET]



E [4PCS]
8313-144



F1 [1SET]



G [1SET]

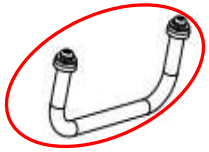

H [1SET]
8240-092



J [1PCS]
9121-072



K[1PCS]
9111-070



L [1PCS]
9420-101

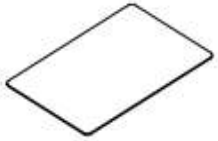

MLP500 ASSEMBLY INSTRUCTIONS

FARME PARTS ILLUSTRATION SHEET

AA1 [1SET]

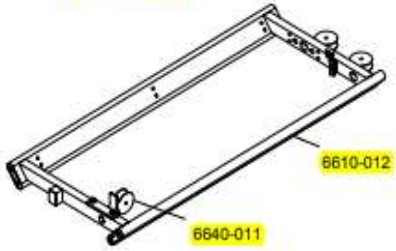

AC [1PCS]
9220-022



AD1 [1PCS]
9220-053

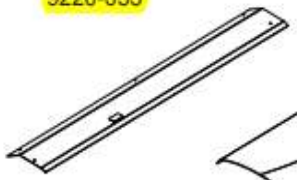

AE [1SET]
9220-024

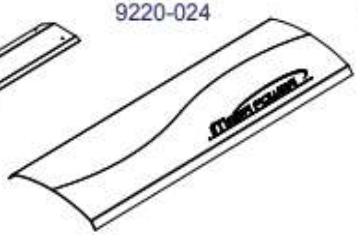

AF [1SET]
9211-148



AG [1SET]
8331-057



AH [2SET]
8331-058



AJ[3PCS]
8311-117

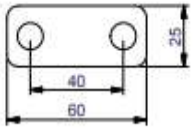

AK[2PCS]
8313-144



AL[1SET]
8331-056



MLP500 ASSEMBLY INSTRUCTIONS

FARME PARTS ILLUSTRATION SHEET

AA1 [1SET]

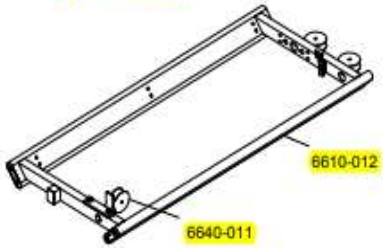

AC [1PCS]
9220-022



AD1 [1PCS]
9220-053

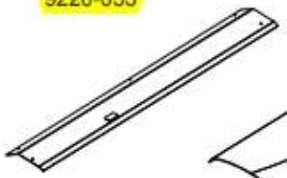

AE [1SET]
9220-024

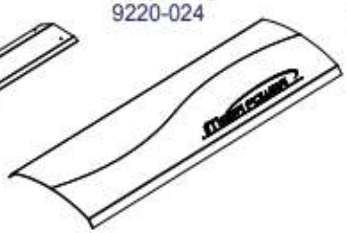

AF [1SET]
9211-148



AG [1SET]
8331-057



AH [2SET]
8331-058



AJ[3PCS]
8311-117

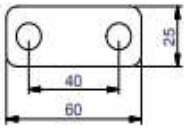

AK[2PCS]
8313-144



AL[1SET]
8331-056



MLP500 ASSEMBLY INSTRUCTIONS

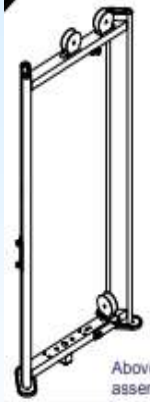

Above shows STEP 1
assembled and completed

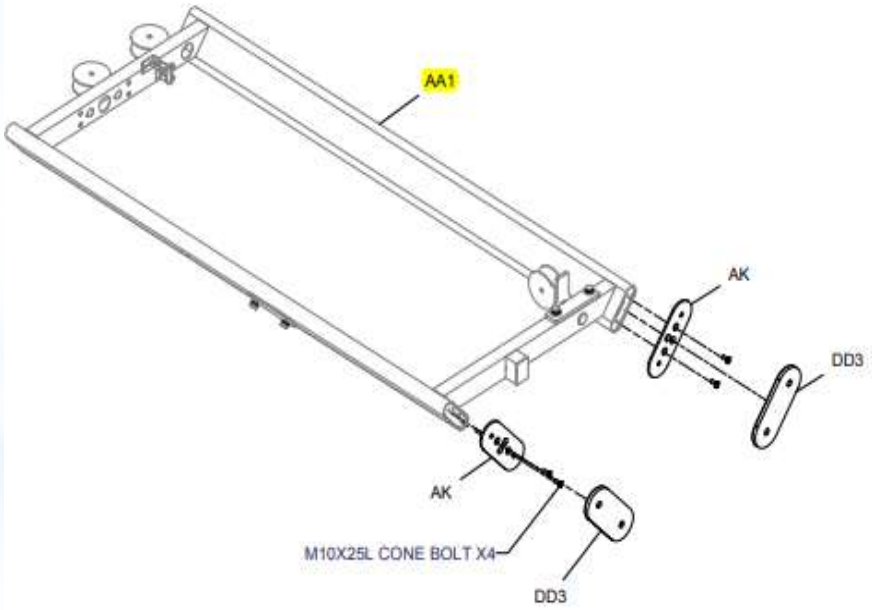

MLP500 ASSEMBLY INSTRUCTIONS

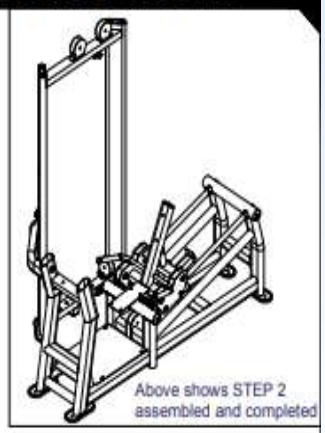

Above shows STEP 2
assembled and completed

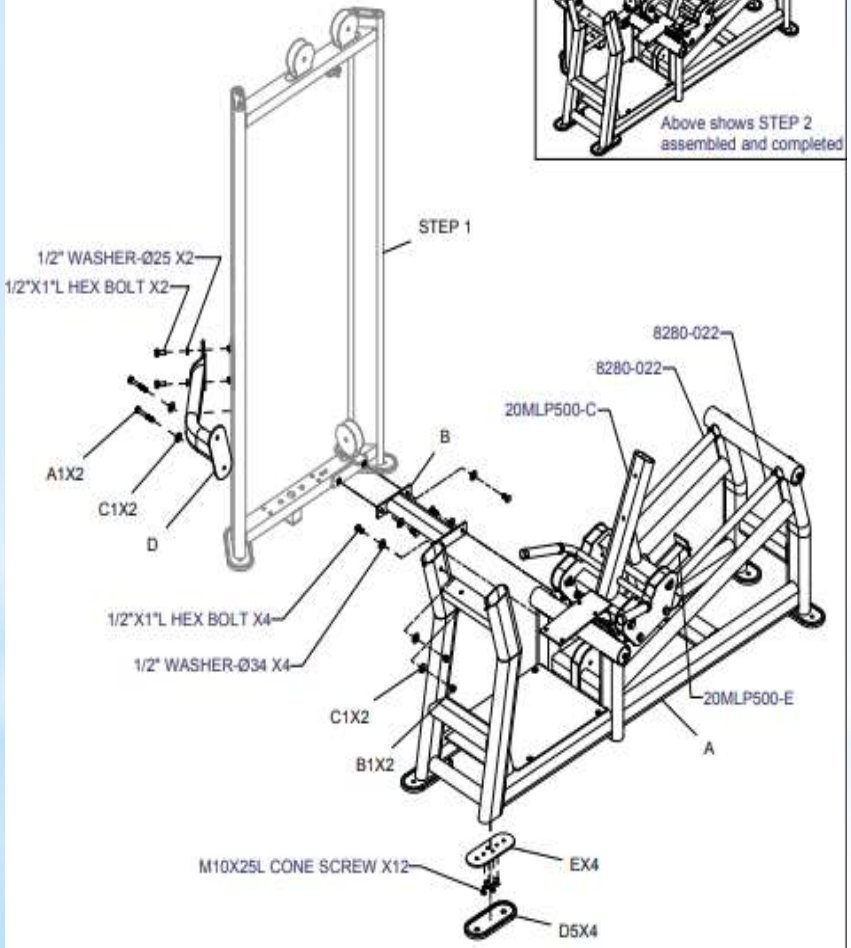

MLP500 ASSEMBLY INSTRUCTIONS

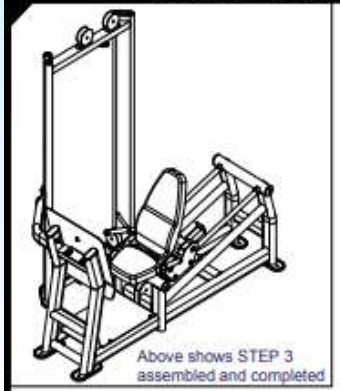

Above shows STEP 3
assembled and completed

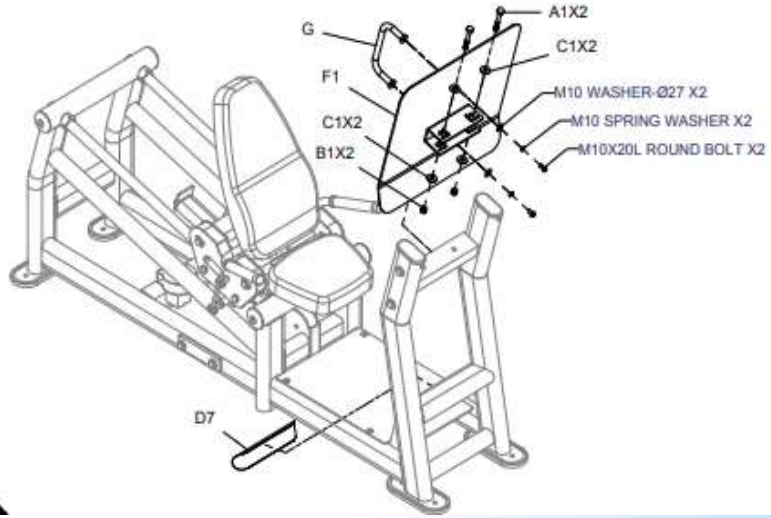

MLP500 ASSEMBLY INSTRUCTIONS

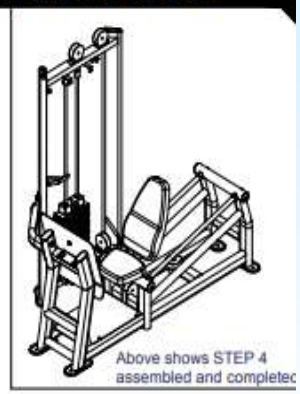

Above shows STEP 4 assembled and completed

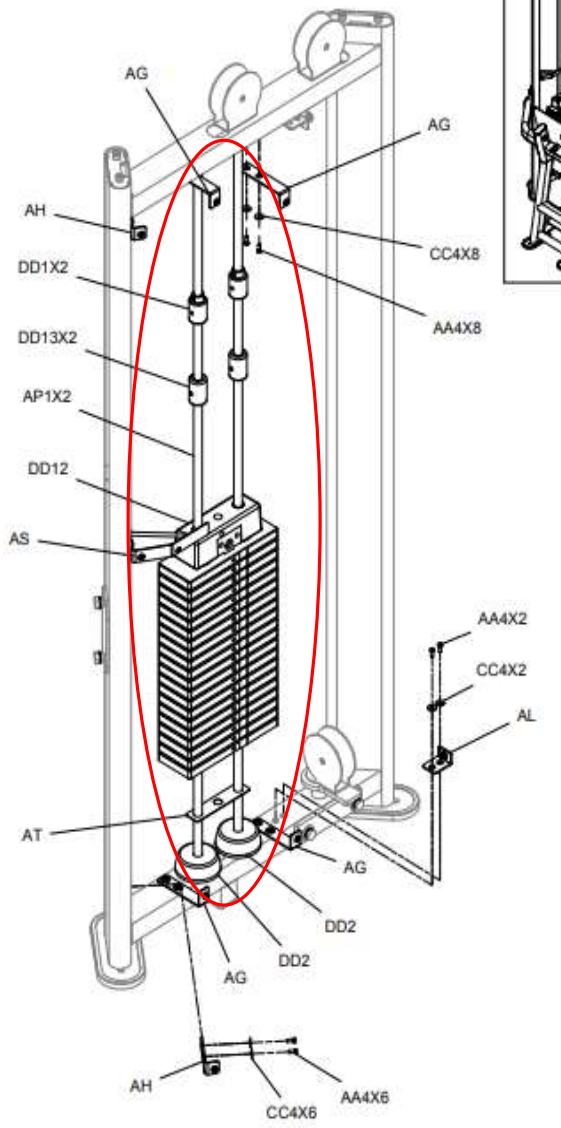

MLP500 ASSEMBLY INSTRUCTIONS



Above shows STEP 5 assembled and completed

MLP500 ASSEMBLY INSTRUCTIONS

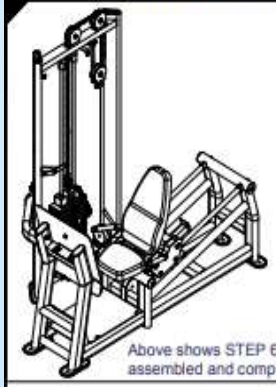

Above shows STEP 6 assembled and completed

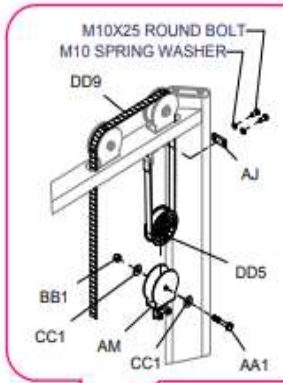

The tread side should be outward

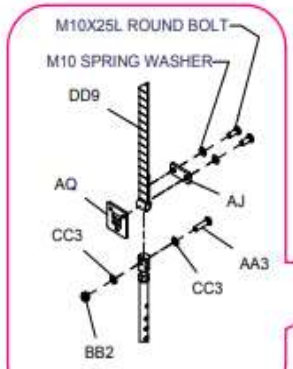

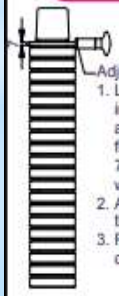

Adjust Belt Procedure:

1. Lift the selector rod a little and then insert the pin between first weight stack and top plate (Do not insert though the first hole of the rod), and there are 7 mm gap between top plate and first weight stack.
2. Adjust the belt to have proper tension and then tighten the belt clamps
3. Remove the pin and let the top plate fall on the first weight plate.

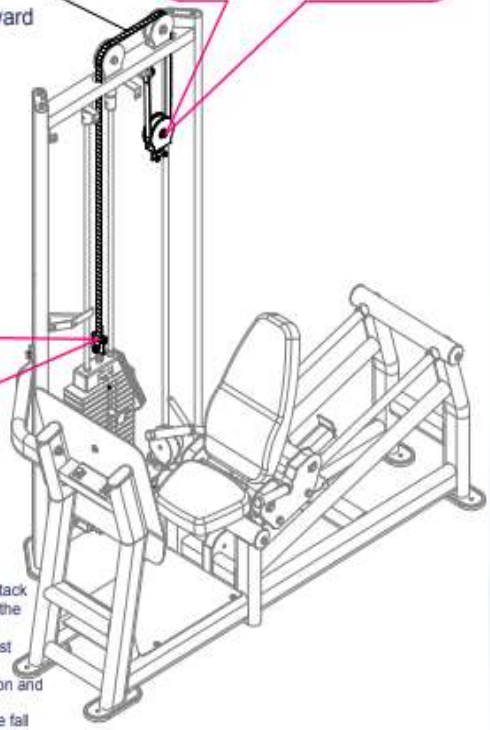

MLP500 ASSEMBLY INSTRUCTIONS

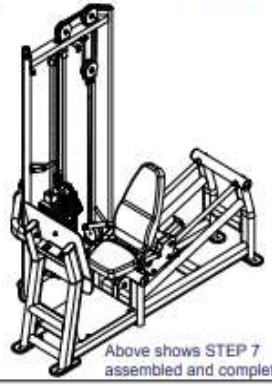

Above shows STEP 7 assembled and completed

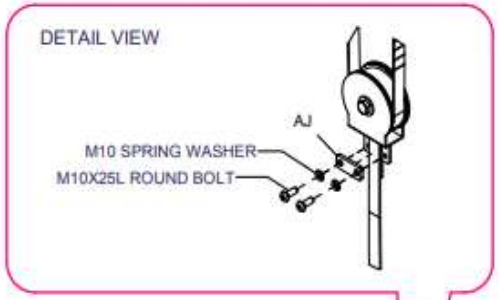

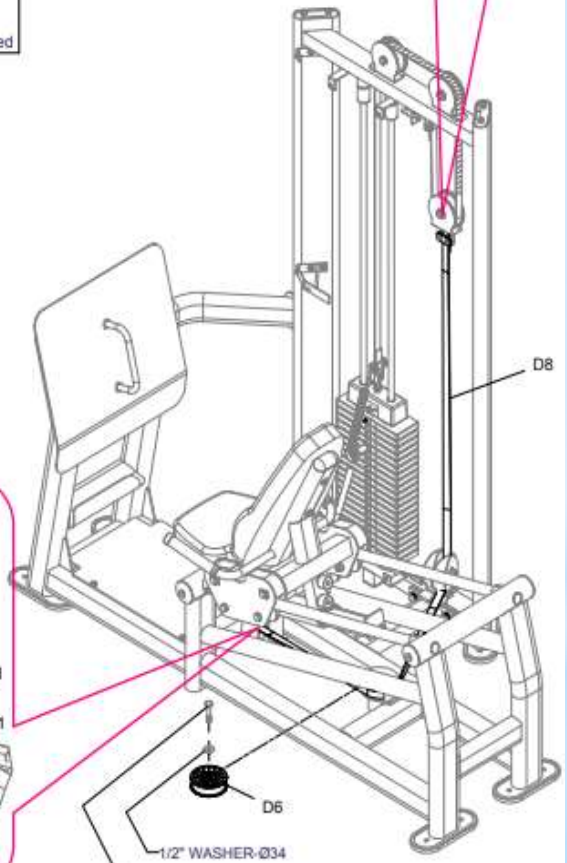

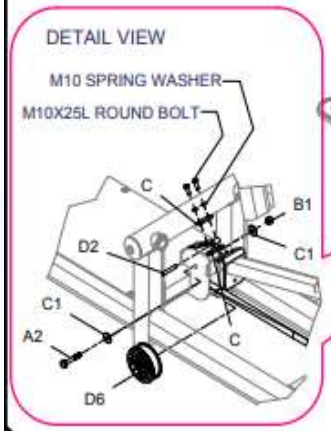

MLP500 ASSEMBLY INSTRUCTIONS

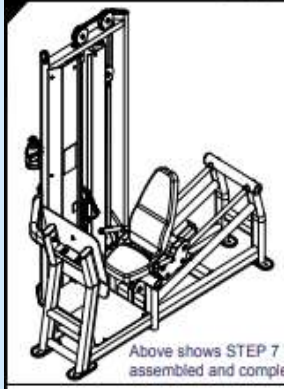

Above shows STEP 7
assembled and completed

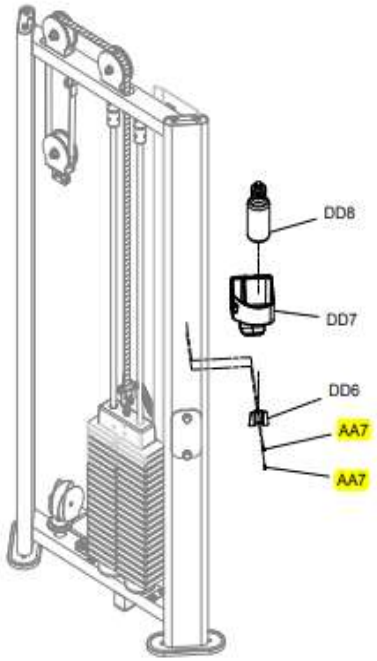

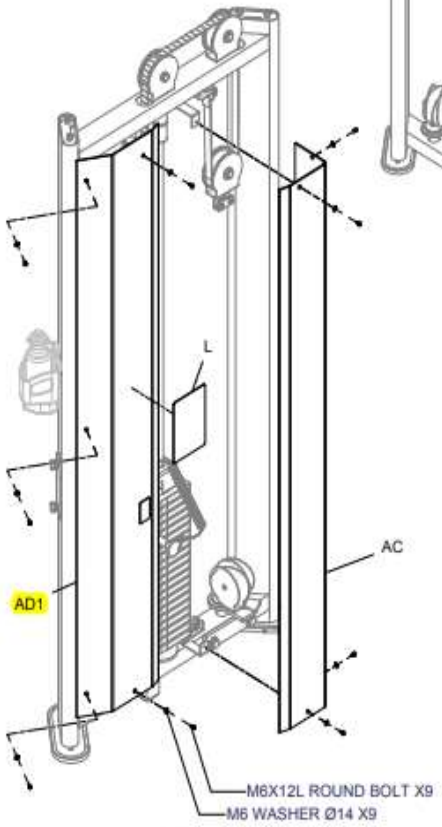

Post location

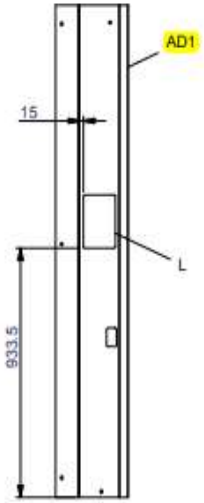

MLP500 ASSEMBLY INSTRUCTIONS



Above shows STEP 8
assembled and completed

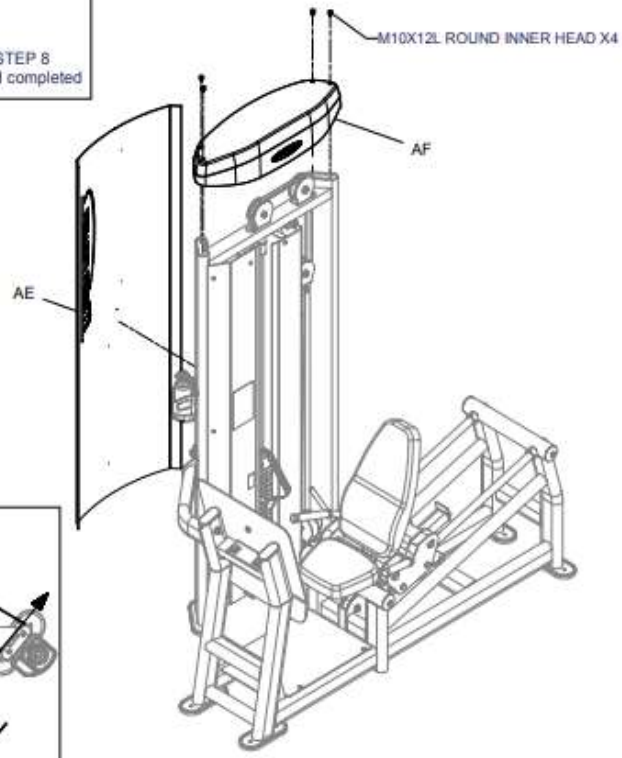

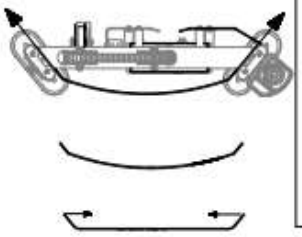

Note: When installing the shroud (AE), push both sides of the shroud toward center in order to bend it a little.
After insert it to the door frame and then releasing it. The shroud will be locked on the door frame.

ASSEMBLY INSTRUCTIONS

Adjust Flat Belt Steps

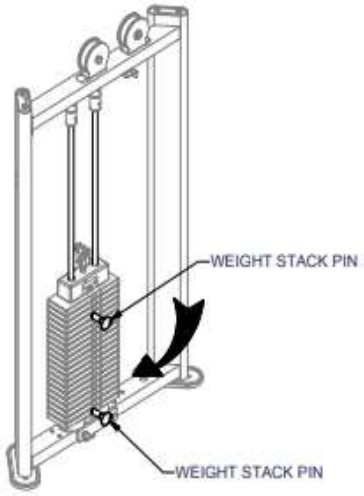

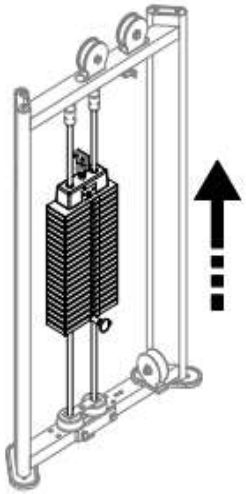

1. When installing flat belt, please put the weight stack pin into 4th weight stack. After installing flat belt, please put the weight stack pin into 20th weight stack.

2. When weight stack pin put into 20th weight stack, please do workout with the machine around 1 minute or 5-10 sets in order to extend the flat belt,flat belt will be loosed a little bit.

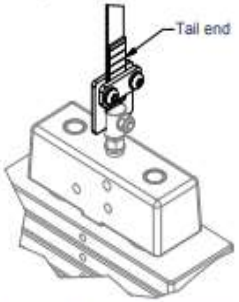

3. Pull end of flat belt as drawing showed to make the flat belt be tightened. (After using the machine 3 months to 6 months, please check flat belt.If the flat belt is loosed, please follow this step to tighten the belt again.)

Guide on Selector Rod Adjustment

STEP 1

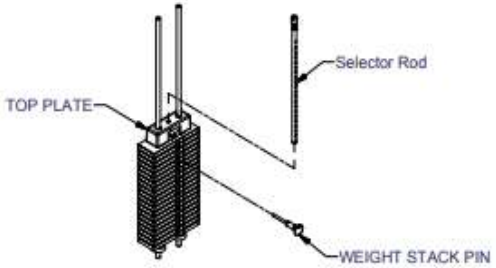

Step 1
Place Selector Rod into Top Plate.
Then put selector pin into the weight plate to fix the rod.

STEP 2

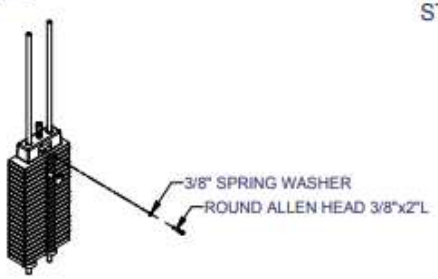

Step 2
Screw the 3/8"x2"L Round Allen Head into Top Plate but not tighten it up.

STEP 3

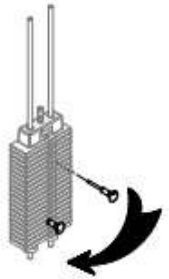

Step 3
Place the selector pin to each weight plate (5,10,15,20....) to check the smoothness.

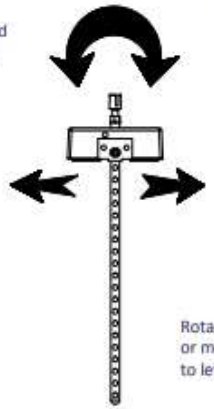

Rotate the Selector Rod slightly
or move the 3/8"x2"L Round Allen Head
to left and right and repeat Step 3.

MEGA POWER series
JUNGLE GYM series

project	Part number	Name	Specification	Quantity	Remark
1	38-200 CAP	round allen head	3/8"X2"L round allen head-CAP	1	
2	38-SPWAS 8732003	3/8" spring washer		1	
3	8210-216C	20 hole Selector Rod		1	
4	8250-166	pin	Ø7.9X137L	1	
5	8250-162	weight stack pin	Ø7X110L	1	
6	8400-010	10LB weight stack plate	102x22bx280L 10LB	20	
7	8400-033	top plate		1	

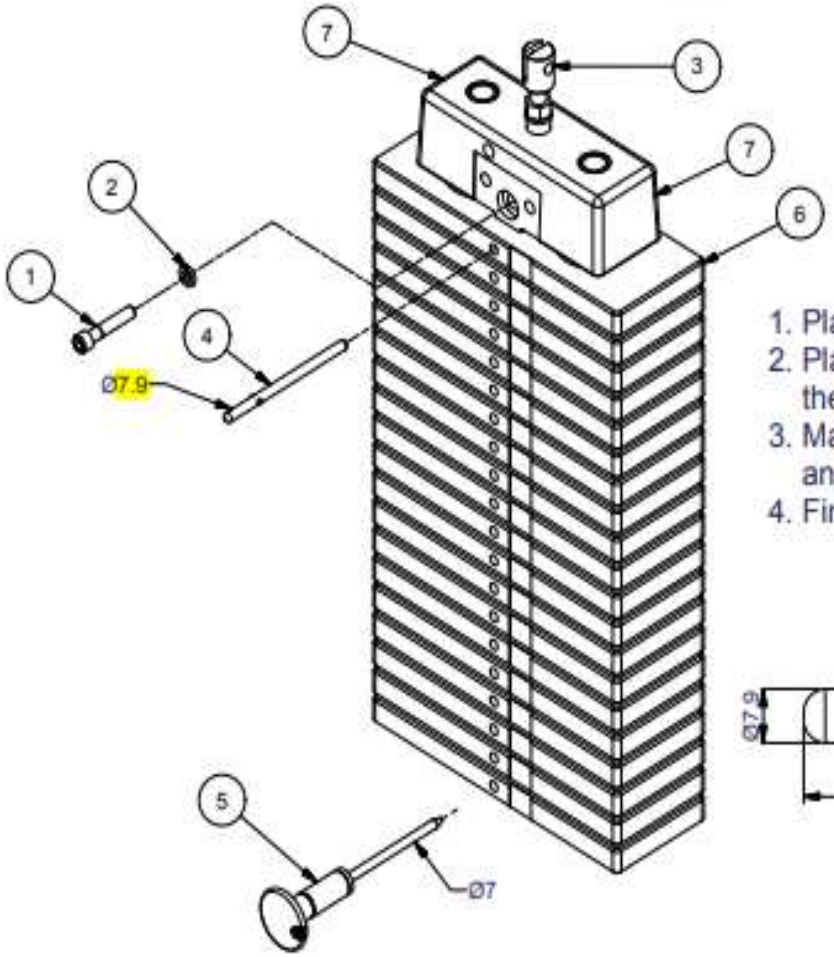

1. Place #4 - 8250-166 (pin) into the first weight plate.
2. Place #5 - 8250-162 (weight stack pin) into the the hole 20th of the weight stack.
3. Make sure #7 (top plate) cling to #6 (first weight plate) and fix in #1 - 3/8"X2"L screw and #2 - 3/8" spring washer.
4. Finally remove #5 - 8250-162 (weight stack pin) and use as usual.

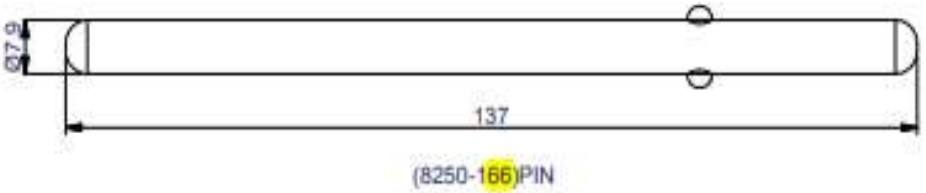

(8250-166)PIN

V2-112017

*Well done!

