*MAM900 Maintenance



* Customers can put some grease on pivot points(red circle place), with brass or gunmetal bushings.





* Let's maintain your machine!

零件代碼	品 名 及 圖 案	用量	備 註
20MAM900-A 20MAM900-C1 國麗3124S-閃銀 國麗KL0002-透明 二途二烤	主架X1SET 座墊架X1SET 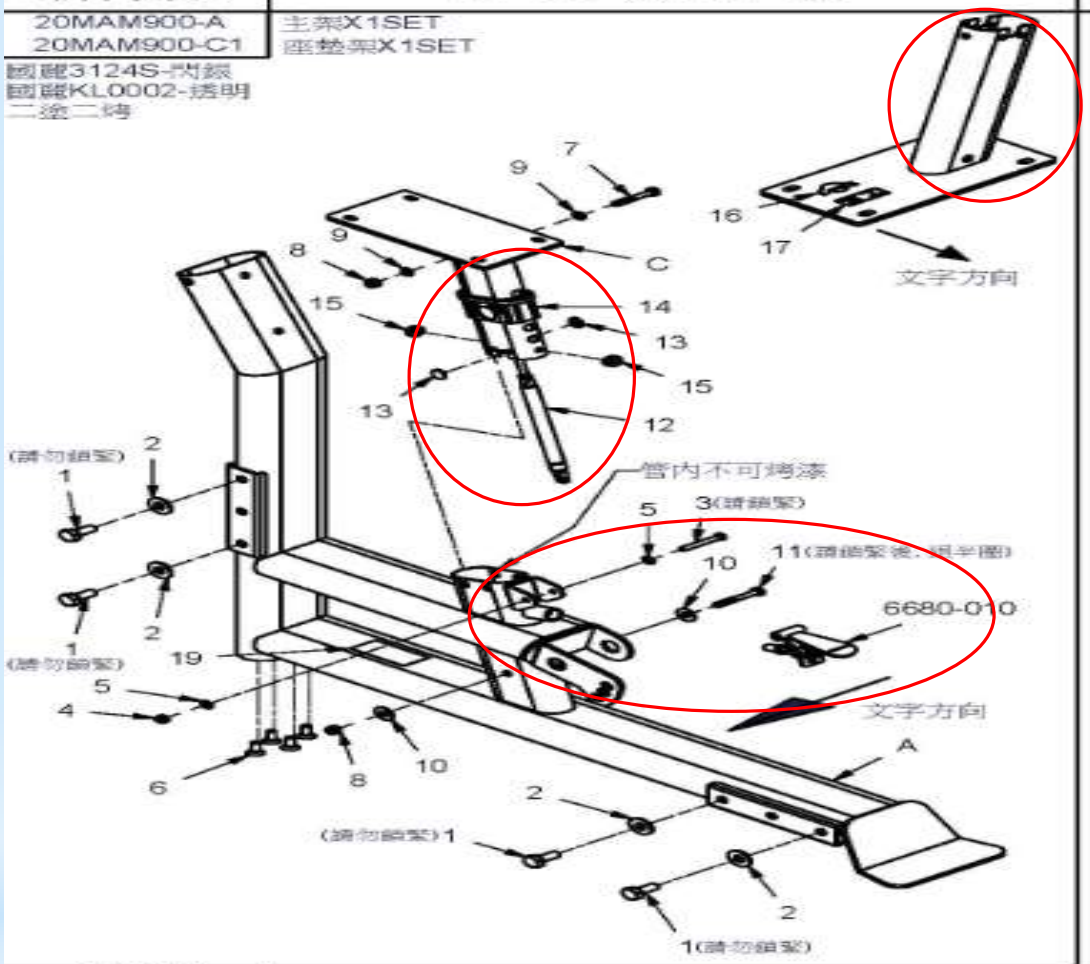		1.組立1/2"1-1/4"L 一般外六角螺絲=4PCS 2.組立1/2"華司Ø34=4PCS 3.組立M8X60L 半圓頭內六角螺絲=1PCS 4.組立M8尼帽=1PCS 5.組立M8華司Ø16=2PCS 6.組立M10X25L 錐形平頭內六角螺絲=4PCS 7.組立3/8"-2-1/4"L 一般外六角螺絲=1PCS 8.組立3/8"尼帽=2PCS 9.組立3/8"華司Ø16=2PCS 10.組立3/8"華司Ø27=2PCS 11.組立3/8"X2-1/2"L 一般外六角螺絲=1PCS 12.組立8830-027氣壓棒=1PCS 13.組立9211-036按扣墊=2PCS 14.組立9211-107雙層套=1PCS 15.組立9211-118按扣墊=2PCS 16.貼9440-055產地貼紙=1PCS 17.貼"工單"貼紙=1PCS 18.點8520-008調華司=2pcs 請配合治具使用 19.貼9440-320認證貼紙=1PCS 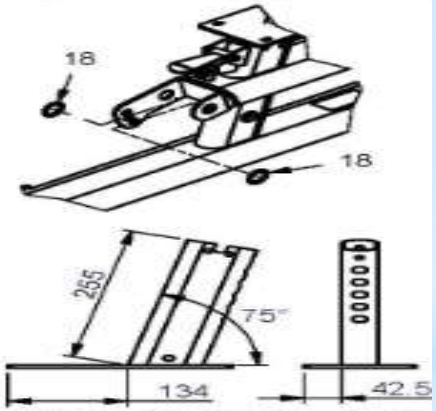
6680-010 280228 國邦790-49153F1HT-深灰	扶手組 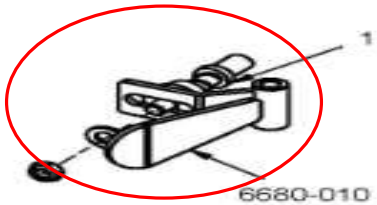		1.組立8250-101調整組=1PCS

零件代碼	品 名 及 圖 案	用量	備 註
20MAM900-B1 國麗3124S-閃銀 國麗KL0002-透明 二塗二烤	腿角架 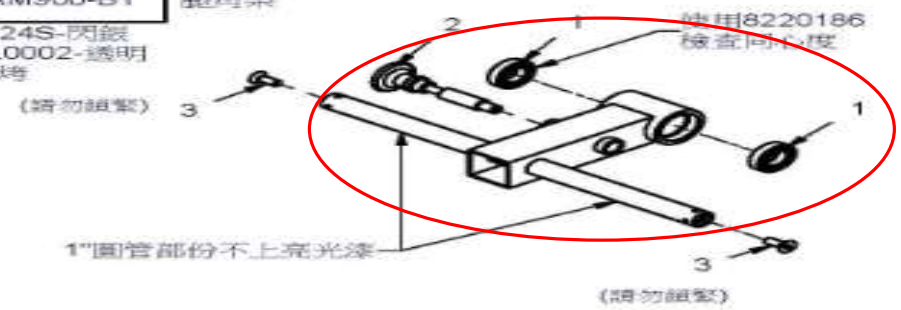	1SET	1.組立8510-018軸承=2PCS 2.組立8250-068調整組=1PCS 3.組立M10X25L 鋅彩平頭內六角螺絲=2PCS
20MAM900-C 國麗3124S-閃銀 國麗KL0002-透明 二塗二烤	座墊架 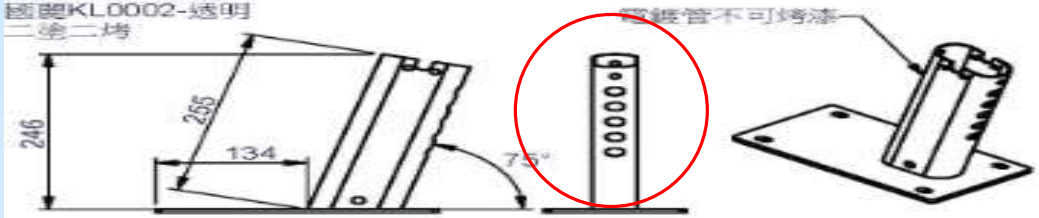	1SET	設變單號 2016030001
20MAM900-D 國麗3124S-閃銀 國麗KL0002-透明 二塗二烤	連接桿 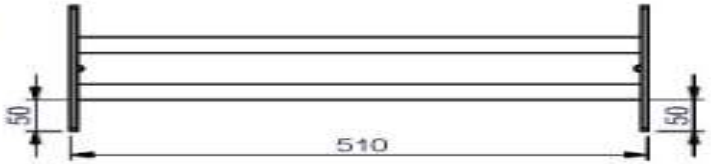	1SET	
20MAM900-E 國麗3124S-閃銀 國麗KL0002-透明 二塗二烤	連接桿 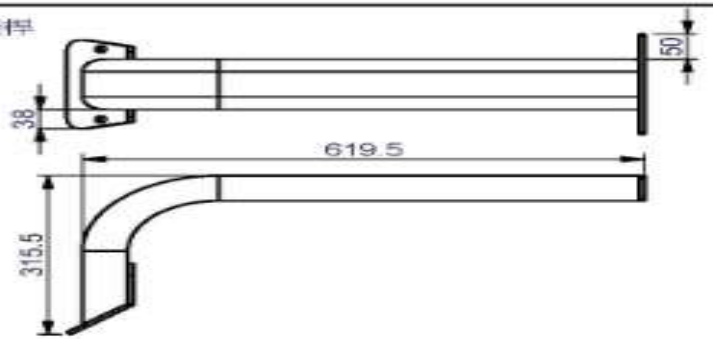	1SET	

零件代碼	品 名 及 圖 案	用量	備 註
20MAM900-F1 國麗3124S-閃銀 國麗KL0002-透明 二塗二烤	搖臂X1SET 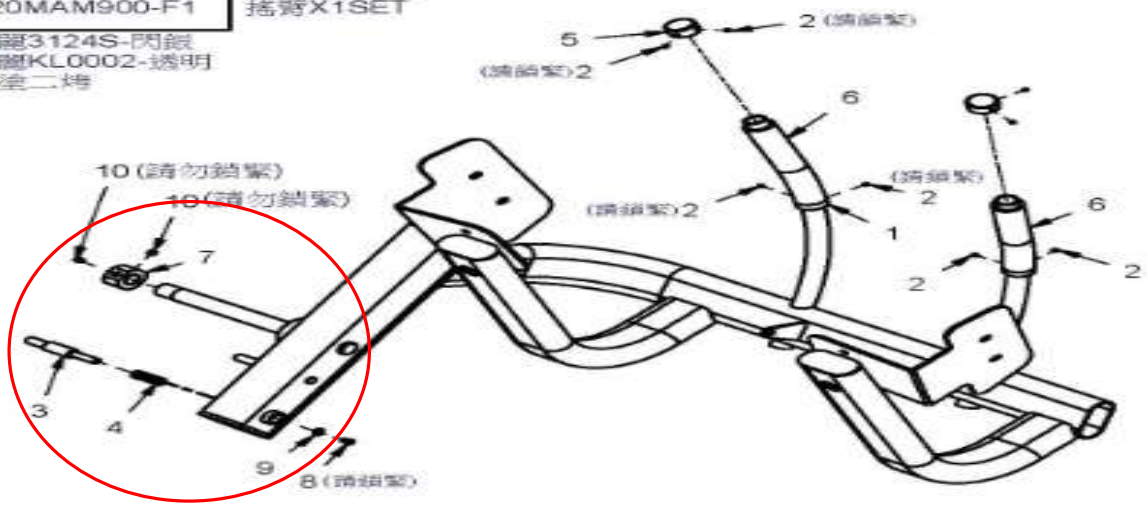 		1.組立8130-250束子=2PCS 2.組立3/16"X3/16"沈頭螺絲=8 3.組立8210-152鐵棒=1PCS 4.組立8840-048彈簧=1PCS 5.組立8890-006鐵套=2PCS 6.組立9162-121高密度把手=2PCS 7.組立8130-288固套=1PCS 8.組立M6X10L 半圓頭內六角螺絲=1PCS 9.組立M6華司Ø13=1PCS 10.組立M8X8L 沈頭螺絲=2PCS 設變單號 2011070003  孔內需鉸孔Ø18~17.9
20MAM900-G 國麗3124S-閃銀 國麗KL0002-透明 二塗二烤 請用20MAM900-F配合檢驗 需鉸孔Ø25	導輪 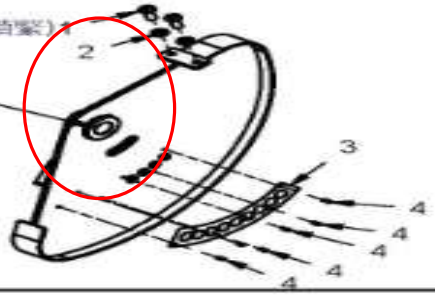 	1SET	1.組立M10X25L 半圓頭內六角螺絲=2PCS 2.組立M10彈簧華司=2PCS 3.組立9440-224 不鏽鋼貼紙=1PCS 4.組立435-(4-3)拉釘=6  HLMAM900A
6640-004 國麗3124S-閃銀 國麗KL0002-透明 二塗二烤	泡棉架 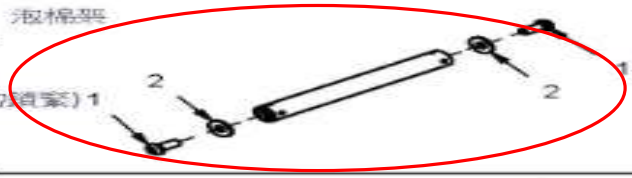 	1PCS	1.組立M10X25L 半圓頭內六角螺絲=2PCS 2.組立M10華司Ø27=2PCS HLMAM900A Ø25.4X2.5TX219L
8311-117 國麗3124S-閃銀 國麗KL0002-透明 二塗二烤	固定片 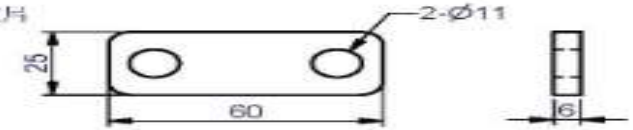 	1PCS	HLMAM900A

零件代碼	品 名 及 圖 案	用量	備 註
8210-157 電鍍	鐵棒 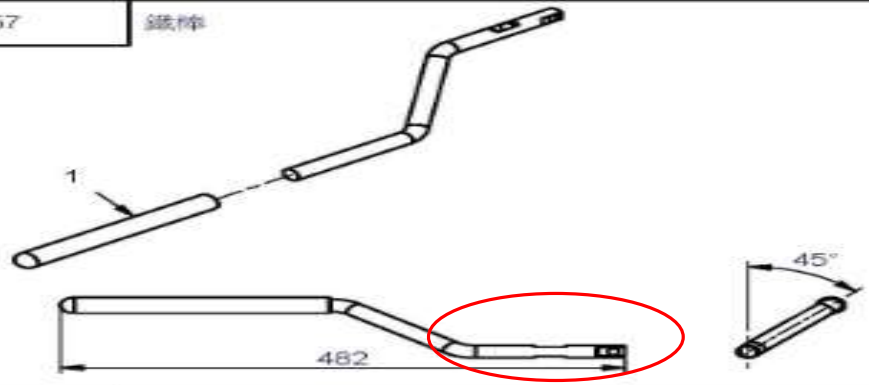	1PCS	1.組立9212-062 高密度把手=1PCS Ø3/4"X3TX230L 設變單號 2019030004 HLMAM900A
9420-105	MAM900動作圖銘板	1PCS	9630-126氣泡袋X1 160X460XB-平口
FMAM9001	3700mm平面皮帶 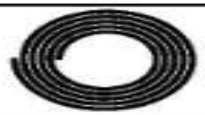	1SET	HLMAM900A
GMAM900A	螺絲包	1SET	HLMAM900A
KMAM900	說明書	1SET	
23MAM900A	附件包	1SET	HLMAM900A
8313-144 國麗3124S-閃銀 國麗KL0002-透明 二塗二烤	固定片 	1PCS	HLMAM900A
8220-186 染黑	轉軸心 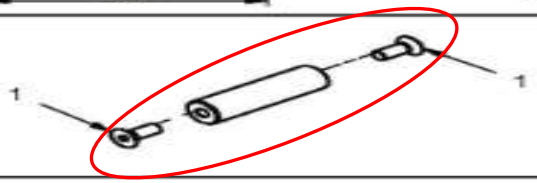	1SET	1.組立M10X25L=2PCS 錐形內六角螺絲 HLMAM900A
			9180-027特固龍X12 9630-009束帶X15 9630-011氣泡布X1 9630-182蜂巢紙X2 9630-183蜂巢紙X2

零件代碼	品 名 及 圖 案	用量	備 註
20MAM900-H2 國麗3124S-閃銀 國麗KL0002透明漆 二塗二烤	門框=1SET 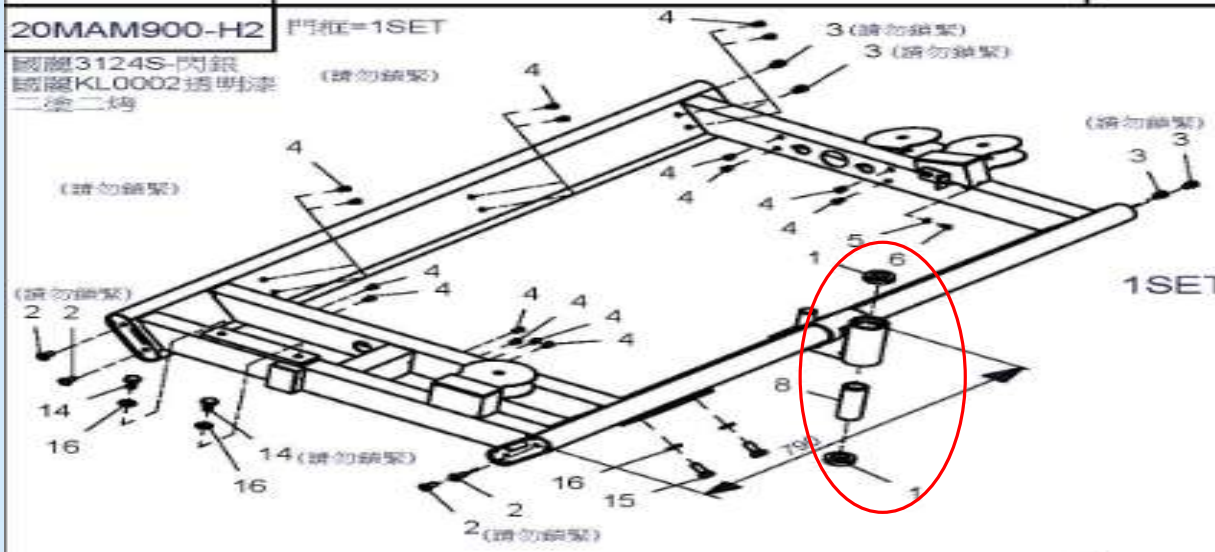 #注意和6610-008/015不同	1SET	1.組立8510-018=2PCS 6005ZZ軸承 2.組立M10X25L=4PCS 錐形內六角螺絲 3.組立M10X12L=4PCS 圓頭內六角-CAP螺絲 4.M6拉帽(身體有花)=16PCS 5.M6華司Ø13=1PCS 6.M6X12L=1PCS 半圓頭內六角螺絲 7. 8.組立8130-289固定套=1PCS 9. 10. 11. 12. 13. 14.組立1/2"X1"L=2PCS 一般外六角螺絲 15.組立1/2"X1-1/4"L=2PCS 一般外六角螺絲 16.組立1/2"華司-Ø25=4PCS 17.
9220-018 壓克力護網 透明黑	前護網-右 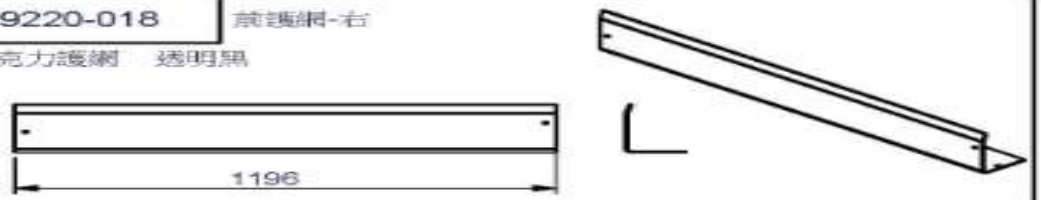	1PCS	設變單號 2019030004
9220-017 壓克力護網 透明黑	前護網-左 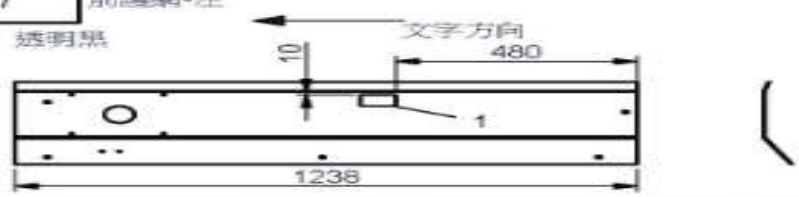	1PCS	1.貼9440-117防夾手貼紙=1PCS

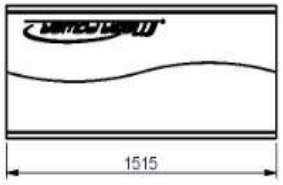

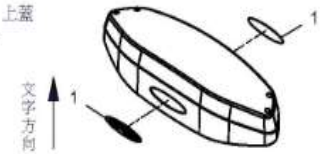

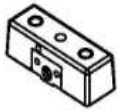

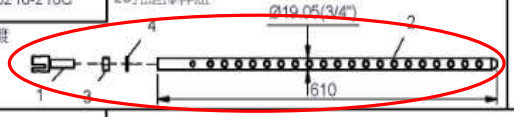

零件代碼	品名及圖案	用量	備註
9220-023 壓克力護網 透明黑	護網 1515	1PCS	
9211-148	上蓋 文字方向 1	1SET	1. 貼9441-370=2PCS 鋁標(Steelflex) H9211148
8400-033	選擇上片	1SET	HLMAM900B
8210-216C 電鍍	20孔選擇桿組 Ø19.05(3/4") 610	1SET	1.組立8260-076固定桿=1PCS 2.組立8210-216 20孔選擇桿=1PCS 3.組立1/2"螺帽=1PCS 4.組立1/2"彈簧華司=1PCS
			設變單號 2016010001
8331-057 國麗3124S-閃銀	固定片 (請勿鎖緊) 1 2	4SET	1.組立M6X12L=4PCS 半圓頭內六角螺絲 2.組立M6華司-Ø13=4PCS HLMAM900B
8313-169 電鍍	固定片 1 2	1PCS	1.組立M10X25L 半圓頭內六角螺絲=2PCS 2.組立M10彈簧華司=2PCS HLMAM900B

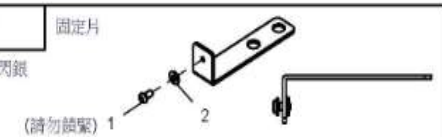

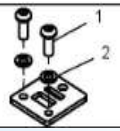





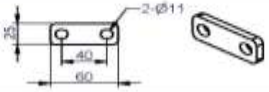



零件代碼	品名及圖案	用量	備註
8331-058 國麗3124S-閃銀	固定片 (請勿鎖緊) 1 2	3SET	1.組立M6X12L 半圓頭內六角螺絲=3PCS 2.組立M6華司-Ø13=3PCS HLMAM900B
8313-144 國麗3124S-閃銀 國麗KL0002透明漆 二塗二烤	固定片	2PCS	HLMAM900B
8311-117 國麗3124S-閃銀 國麗KL0002透明漆 二塗二烤	固定片 2-Ø11 25 40 60	1PCS	HLMAM900B
8280-041	導桿 Ø19.1(3/4") 1243	2PCS	
23MAM900B	附件包	1SET	HLMAM900B
23MDCUP	附件包-CUP	1SET	HLMAM900B
25MAM900	皮帶輪包	1SET	HLMAM900B
GMAM900B	螺絲包	1SET	HLMAM900B
			9180-025特固鎖X4 9180-028特固鎖X2 9630-009底帶X4 9630-031氣泡袋X1 9630-064氣泡布X1 9630-080氣泡布X1 9630-151氣泡袋X1 9630-176條扁紙X1
			設變單號 2019030004
8331-056 國麗3124S-閃銀	L型片 1 2	1SET	1.組立M6X12L=1PCS 半圓頭內六角頭螺絲 2.組立M6華司Ø13=1PCS
8311-194 K32027G 深灰砂	固定片 3-Ø19.5 38 167 2	1PCS	HLMAM900B

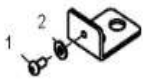

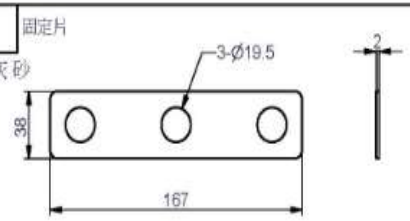

零件代碼	品 名 及 圖 案	用量	備 註
9111-085 黑色耐寒乳膠皮	背墊 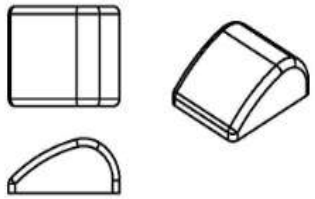	1PCS	
9121-082 黑色耐寒乳膠皮	座墊 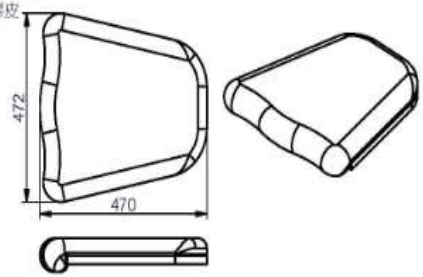	1PCS	設變單號 2016030001
9131-040 黑色耐寒乳膠皮	肘墊 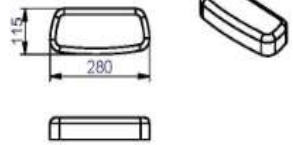	4PCS	
9161-077	泡棉 	2PCS	
9161-049 黑色耐寒乳膠皮	泡棉組 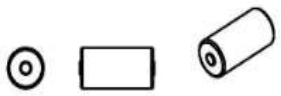	1PCS	委外加工單9161-037 Ø4"X23X8"L

零件代碼	品 名 及 圖 案	用量	備 註
9111-085R 紅色耐寒乳膠皮	背墊 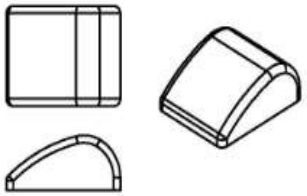	1PCS	
9121-082R 紅色耐寒乳膠皮	座墊 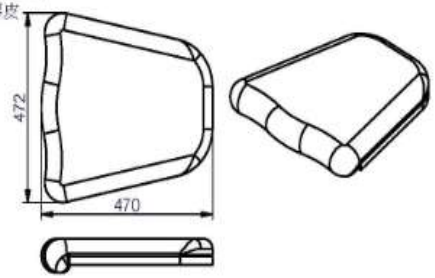	1PCS	設變單號 2011070003
9131-040R 紅色耐寒乳膠皮	肘墊 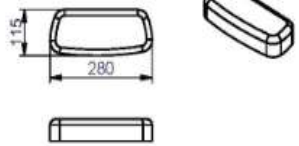	4PCS	
9161-018R 紅色耐寒乳膠皮	泡棉組 	2PCS	委外加工單9161-009 Ø4"X23X8"L
9161-049R 紅色耐寒乳膠皮	泡棉組 	1PCS	委外加工單9161-037 Ø4"X23X8"L

MAM-900 ASSEMBLY INSTRUCTIONS

HARDWARE ILLUSTRATION

D1.Ø50 CAP COVER(8130-131)----------[2PCS]
D2.Ø60 CAP COVER(8130-231)----------[2PCS]
D3.Ø10X60L SHAFT (8210-156) ----------[1PCS]
D4.ROLLER THRUST BEARING(8510-008)----------[1PCS]
D5.Ø1" CU WASHER(8520-008)----------[4PCS]
D6.Ø1" END CAP(9211-016)----------[2PCS]
D7. □50 End Cap (9211-087)----------[1PCS]
D8.58X116 END CAP(9211-189)----------[1PCS]
D10. 2" Nylon Washer (9214-001)----------[2PCS]
D9. 40X80X2T END CAP(9211-113)----------[1PCS]
D11. 3" Nylon Washer (9214-008)----------[4PCS]
D12. Ø27.5X12.5L Rubber Pad(9214-030)----------[4PCS]
D13.108X263 RUBBER PAD(9310-075)----------[1PCS]

D1



D2



D3



D4



D5



D6



D7



D8



D9



D10



D11



D12



D13



MAM-900 ASSEMBLY INSTRUCTIONS

FRAME HARDWARE ILLUSTRATION

D16.3/4" SHAFT COLLAR(9211-147)----------[2PCS]
D17.Ø4" RUBBER PAD(9310-017)----------[2PCS]
D18.108X263 RUBBER PAD(9310-075)----------[2PCS]

D20.Ø115 PULLEY(9213-042B)----------[3PCS]
D21.BOTTLE BRACKET(8388-025)----------[1PCS]
D22.BOTTLE RACK(9260-320)----------[1PCS]
D23.BOTTLE(9260-123)----------[1PCS]

D16



D17



D18



D20



D21



D22



D23



MAM-900 ASSEMBLY INSTRUCTIONS

HARDWARE ILLUSTRATION

D14.3700mm BELT(FMAM9001)----------[1PCS]
D15.EXERCISE CHART (9420-105)----------[1PCS]

D14



D15

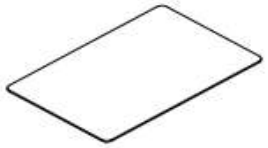

MAM-900 ASSEMBLY INSTRUCTIONS

FRAME HARDWARE ILLUSTRATION

D26. Ø1" BUFFER COVER (9212-019) ----------[1PCS]
D27.TOP PLATE(8400-033)----------[1PCS]
D28.3/4" SHAFT COLLAR(9211-167)----------[2PCS]
D29.Selector Rod(8210-216C)----------[1PCS]

D26



D27



D28



D29

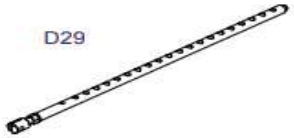

MAM-900 ASSEMBLY INSTRUCTIONS

PARTS ILLUSTRATION SHEET

A1[1PCS]

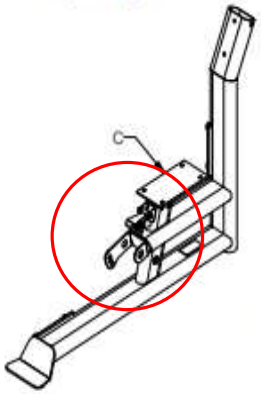

B1[1PCS]

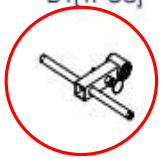

D[1PCS]

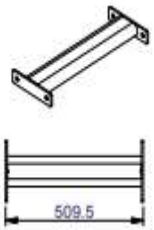

E[1PCS]



F1[1PCS]

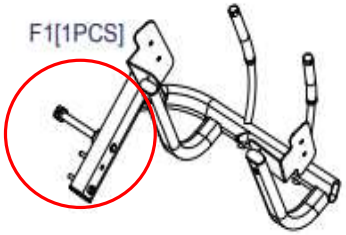

G[1PCS]

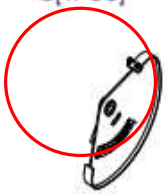

I[1PCS]
6640-004
Ø1"X219L



J[1PCS]
8311-117

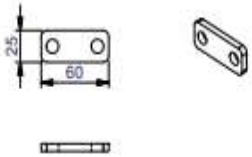

K[1PCS]
8311-117



L[1PCS]
8313-144

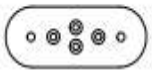

M[1PCS]
8220-186
Ø25x87.5L



MAM-900 ASSEMBLY INSTRUCTIONS

PARTS ILLUSTRATION SHEET

N1[1PCS]
9111-085



O[1PCS]
9121-082

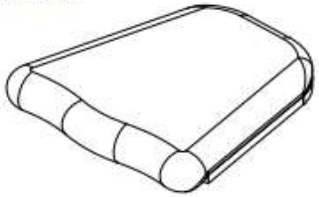

P[4PCS]
9131-040



Q1[2PCS]
Ø4"XØ23X8"L
9161-077



R[1PCS]
Ø4"XØ27X8"L
9161-049



MAM-900 ASSEMBLY INSTRUCTIONS

FRAME PARTS ILLUSTRATION SHEET

H2[1PCS]

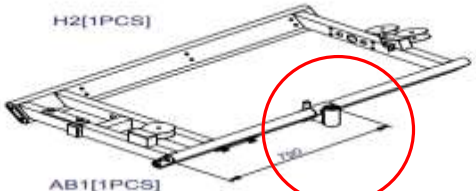

AB1[1PCS]
9220-017



AC[1PCS]
9220-018



AD[1PCS]
9220-023



AE[1PCS]
9211-148



MAM-900 ASSEMBLY INSTRUCTIONS

FRAME PARTS ILLUSTRATION SHEET

AF[4PCS]
8331-057

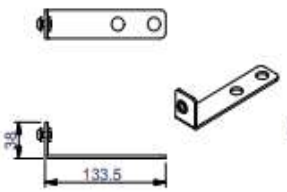

AG[1PCS]
8313-169

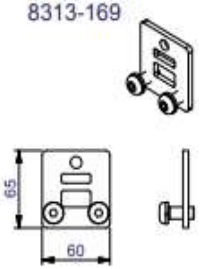

AH[1PCS]
8311-117

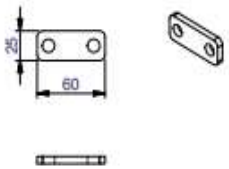

AI[3PCS]
8331-058

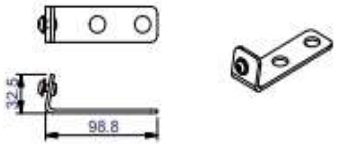

AJ[2PCS]
8313-144

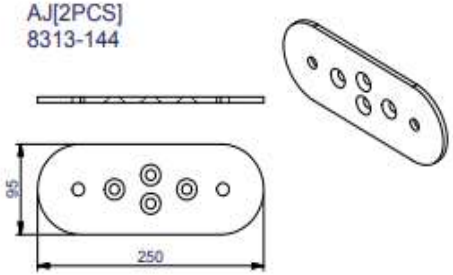

AL1[2PCS]
8280-041
Ø3/4"X1243L



AM[1PCS]
8331-056

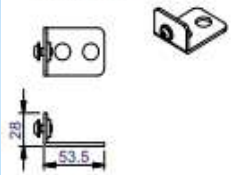

AP[1PCS]
8311-194

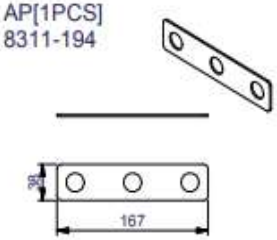

MAM-900 ASSEMBLY INSTRUCTIONS

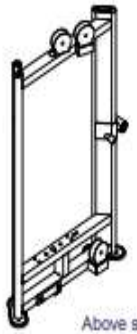

Above shows STEP 1
assembled and completed

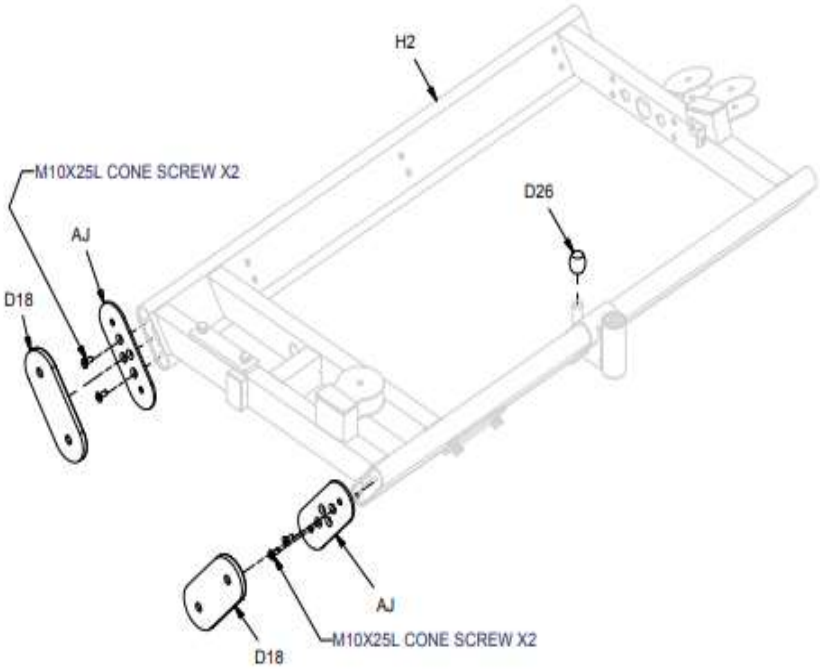

MAM-900 ASSEMBLY INSTRUCTIONS



Above shows STEP 2
assembled and completed

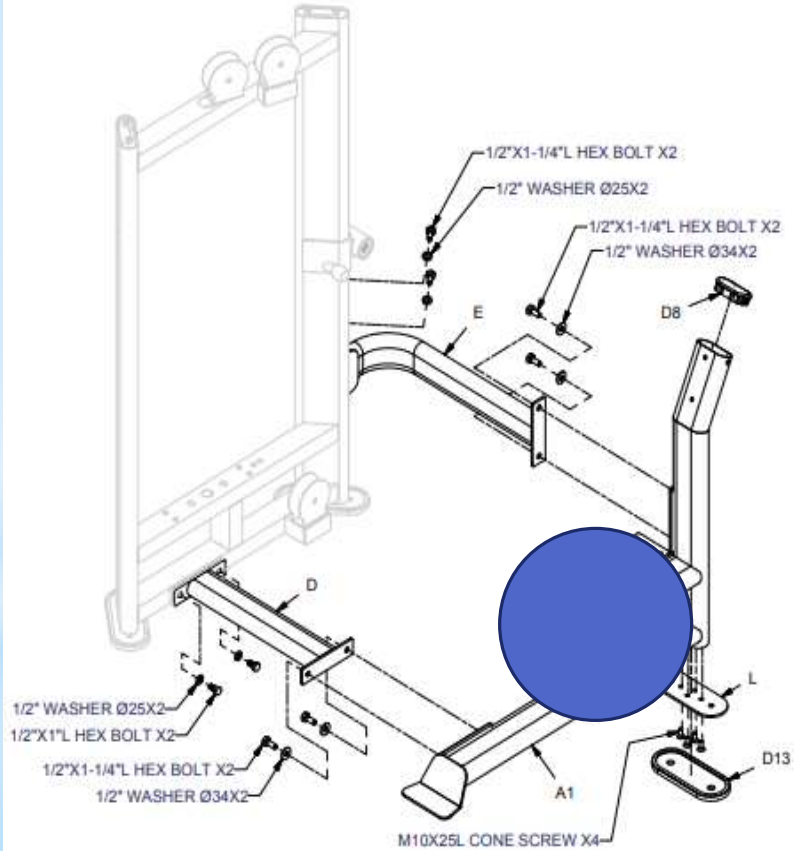

MAM-900 ASSEMBLY INSTRUCTIONS

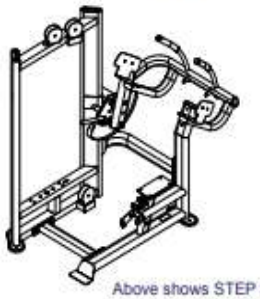

Above shows STEP 3
assembled and completed

MAM-900 ASSEMBLY INSTRUCTIONS

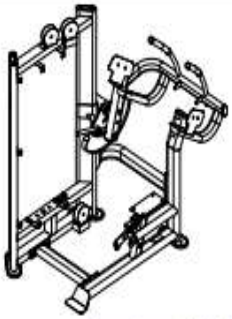

Above shows STEP 4
assembled and completed

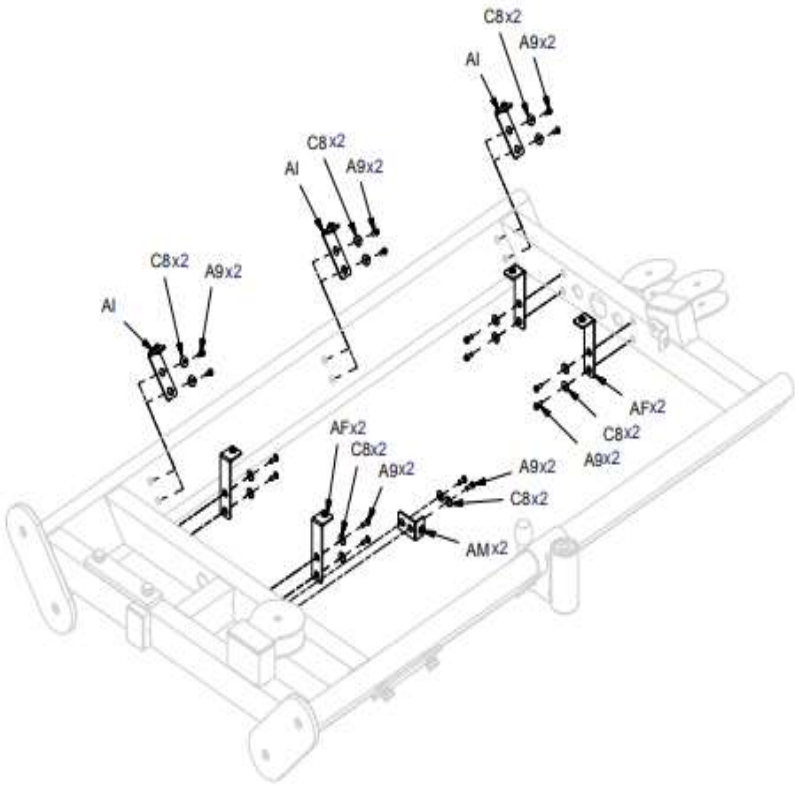

MAM-900 ASSEMBLY INSTRUCTIONS

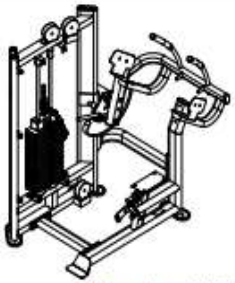

Above shows STEP 5
assembled and completed

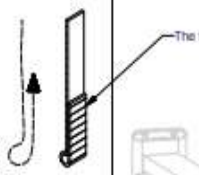

Figure 1

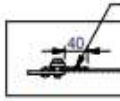

Figure 2

Push guide rods (AL1) to tilt one side and then install weight stacks.
Once finishing the weight stack installation, pull
guide rods (AL1) back and continue setup D27→D16

MAM-900 ASSEMBLY INSTRUCTIONS

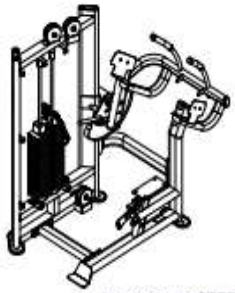

Above shows STEP 6
assembled and completed

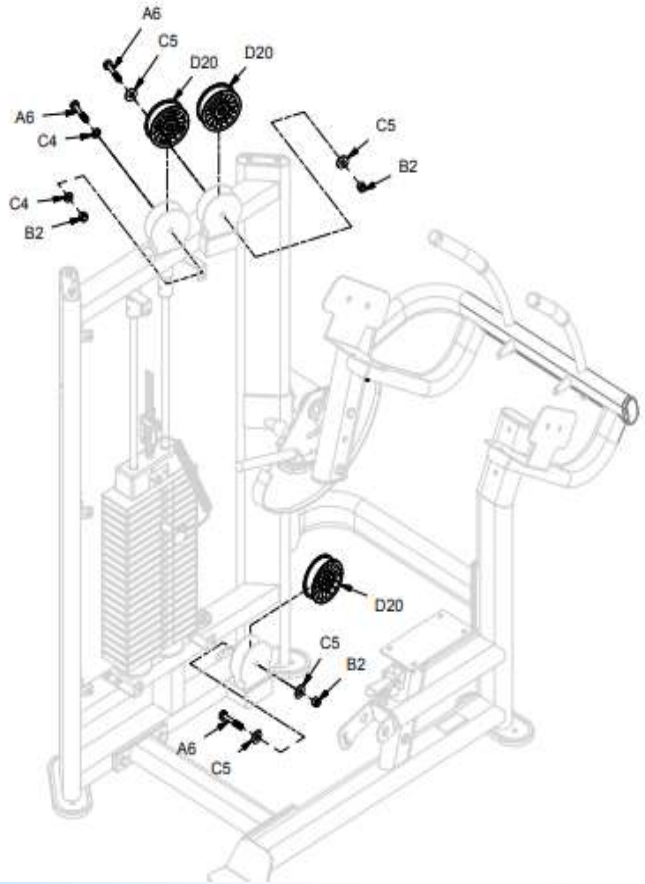

MAM-900 ASSEMBLY INSTRUCTIONS

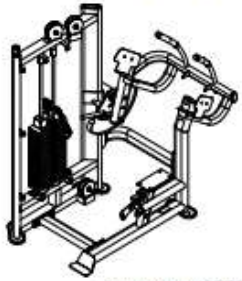

Above shows STEP 7
assembled and completed

NOTE:
1. THE BELT SMOOTH SIDE SHOULD ATTACH ON PULLEY SURFACE, AND THE BELT SMOOTH SIDE WRAP AROUND THE BELT RETAINER SHAFT (AG)
2. PLEASE BE SURE THE PRESSURE BETWEEN THE BELT CLAMPS (AH) DO NOT EXCEED 70 PSI

The belt should reserve 40mm extra length

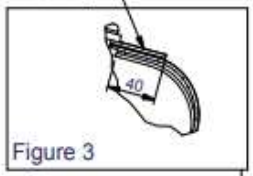

Figure 3

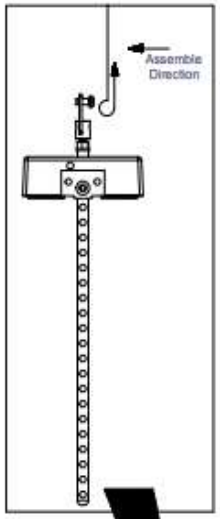

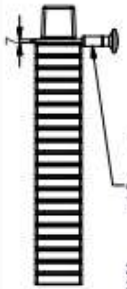

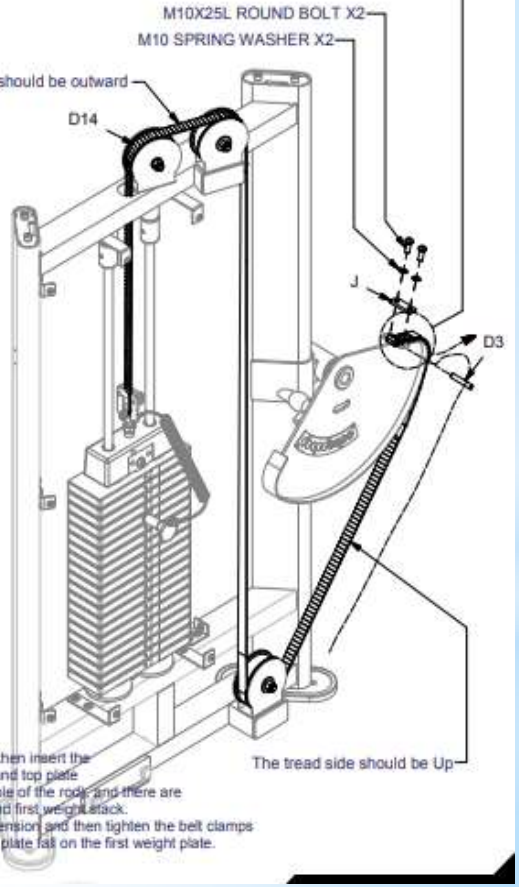

Adjust Belt Procedure:
1. Lift the selector rod a little and then insert the pin between first weight stack and top plate (Do not insert though the first hole of the rod, and there are 7 mm gap between top plate and first weight stack.
2. Adjust the belt to have proper tension and then tighten the belt clamps
3. Remove the pin and let the top plate fall on the first weight plate.

MAM-900 ASSEMBLY INSTRUCTIONS

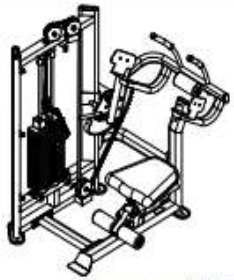

Above shows STEP 8
assembled and completed

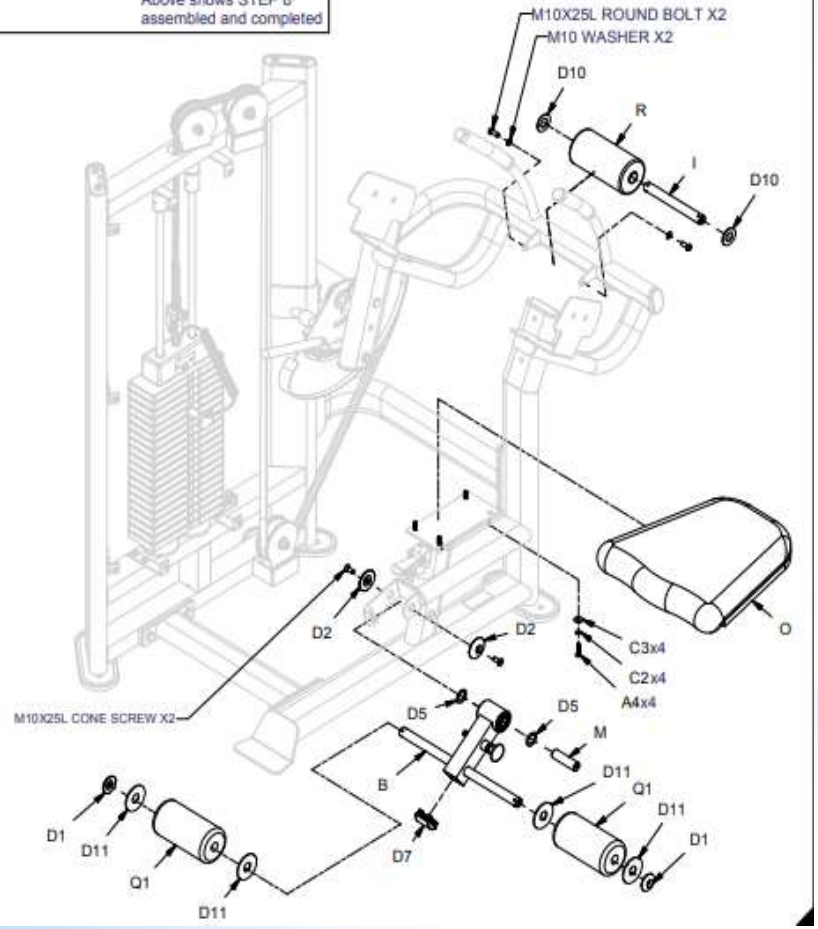

MAM-900 ASSEMBLY INSTRUCTIONS

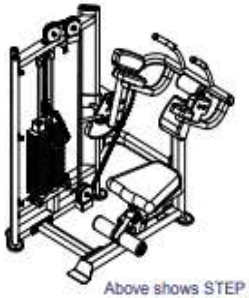

Above shows STEP 9
assembled and completed

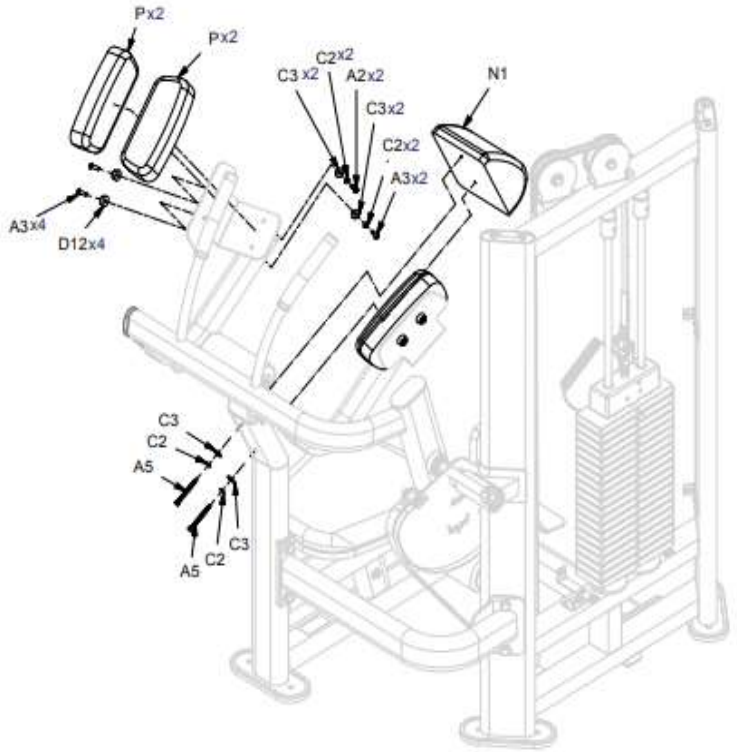

MAM-900 ASSEMBLY INSTRUCTIONS

Post location

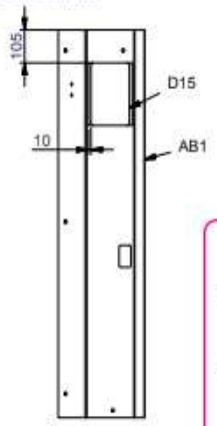

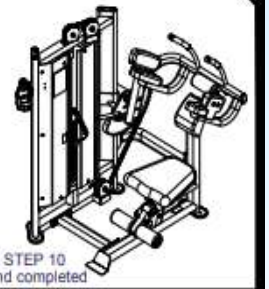

Above shows STEP 10 assembled and completed

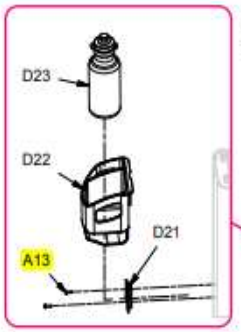

MAM-900 ASSEMBLY INSTRUCTIONS



Above shows STEP 11 assembled and completed

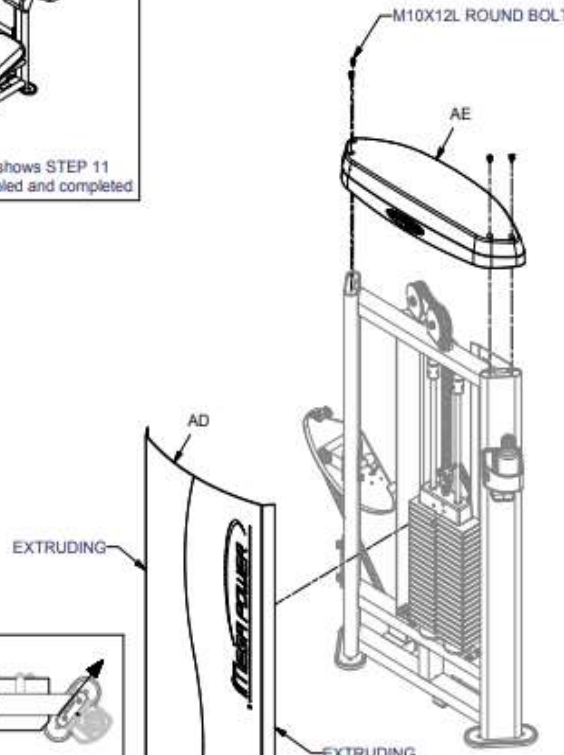

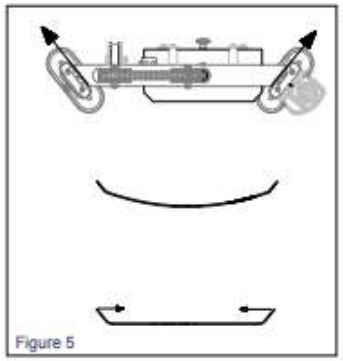

Figure 5

Note: When installing the shroud (AD), push both sides of the shroud toward center in order to bend it a little.
After insert it to the door frame and then releasing it. The shroud will be locked on the door frame.

ASSEMBLY INSTRUCTIONS

Adjust Flat Belt Steps

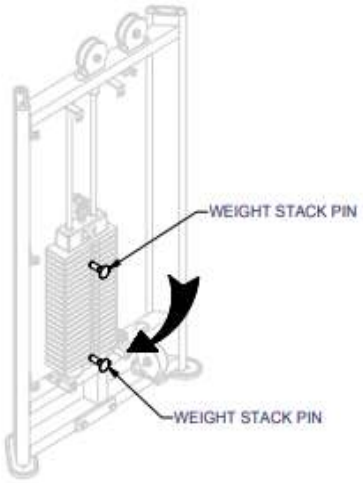

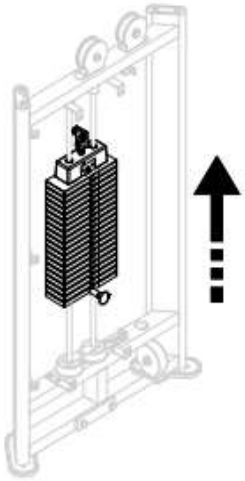

1. When installing flat belt, please put the weight stack pin into 4th weight stack. After installing flat belt, please put the weight stack pin into 20th weight stack.

2. When weight stack pin put into 20th weight stack, please do workout with the machine around 1 minute or 5-10 sets in order to extend the flat belt,flat belt will be loosed a little bit.

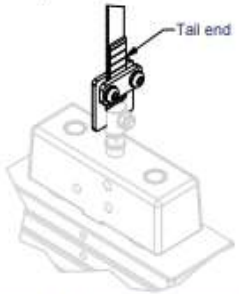

3. Pull end of flat belt as drawing showed to make the flat belt be tightened. (After using the machine 3 months to 6 months, please check flat belt.If the flat belt is loosed, please follow this step to tighten the belt again.)

Guide on Selector Rod Adjustment

STEP 1

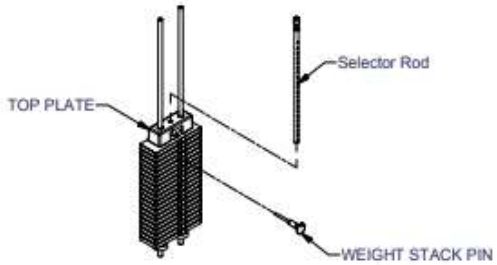

Step 1
Place Selector Rod into Top Plate.
Then put selector pin into the weight plate to fix the rod.

STEP 2



Step 2
Screw the 3/8"x2"L Round Allen Head into Top Plate but not tighten it up.

STEP 3

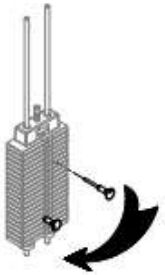

Step 3
Place the selector pin to each weight plate (5,10,15,20....) to check the smoothness.

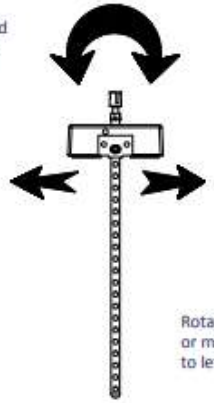

Rotate the Selector Rod slightly
or move the 3/8"x2"L Round Allen Head
to left and right and repeat Step 3.

MEGA POWER series
JUNGLE GYM series

project	Part number	Name	Specification	Quantity	Remark
1	38-200 CAP	round allen head	3/8"X2"L round allen head-CAP	1	
2	38-SPWAS 8732003	3/8" spring washer		1	
3	8210-216C	20 hole Selector Rod		1	
4	8250-166	pin	Ø7.9X137L	1	
5	8250-162	weight stack pin	Ø7X110L	1	
6	8400-010	10LB weight stack plate	102x22bx280L 10LB	20	
7	8400-033	top plate		1	

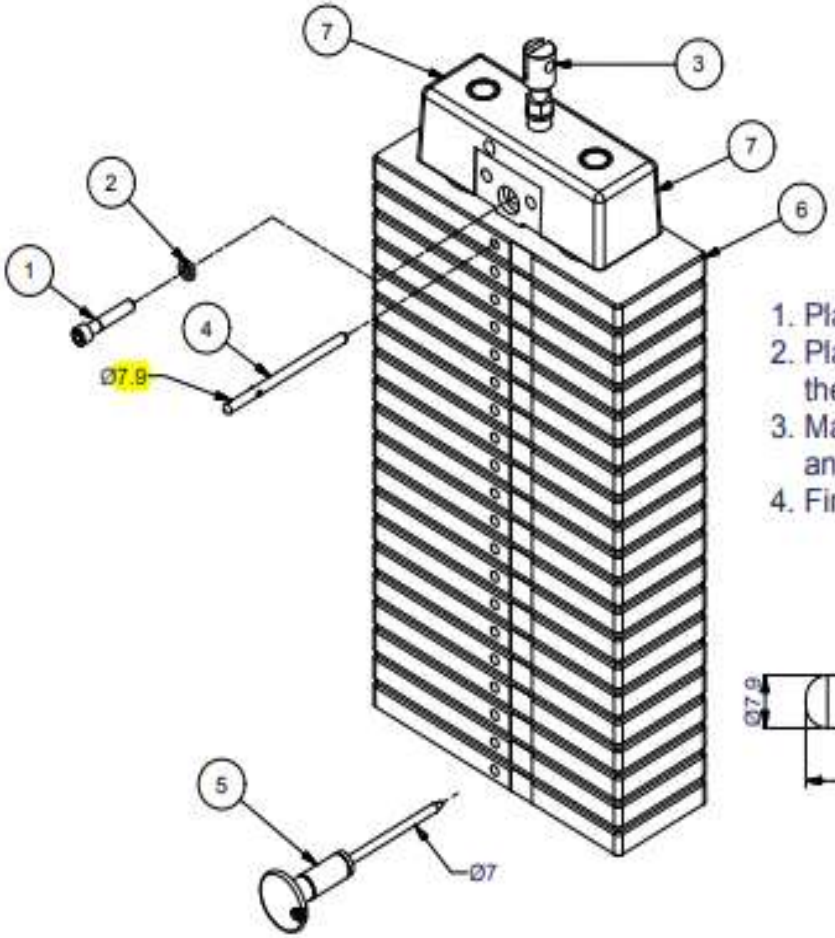

1. Place #4 - 8250-166 (pin) into the first weight plate.
2. Place #5 - 8250-162 (weight stack pin) into the the hole 20th of the weight stack.
3. Make sure #7 (top plate) cling to #6 (first weight plate) and fix in #1 - 3/8"X2"L screw and #2 - 3/8" spring washer.
4. Finally remove #5 - 8250-162 (weight stack pin) and use as usual.

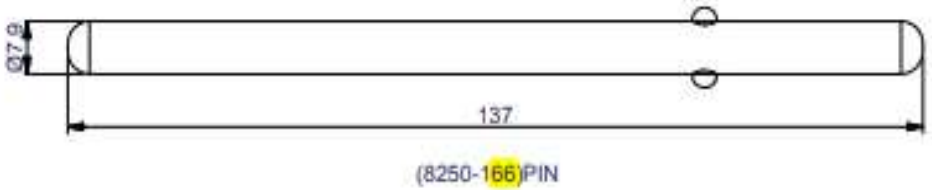

(8250-166)PIN

V2-112017

*Well done!

