*MPD700 Maintenance



* Customers can put some grease on pivot points(red circle place), with brass or gunmetal bushings.





* Let's maintain your machine!

零件代碼	品 名 及 圖 案	用量	備 註
20MPD700-A 20MPD700-F	主架X1SET 座墊架X1SET		

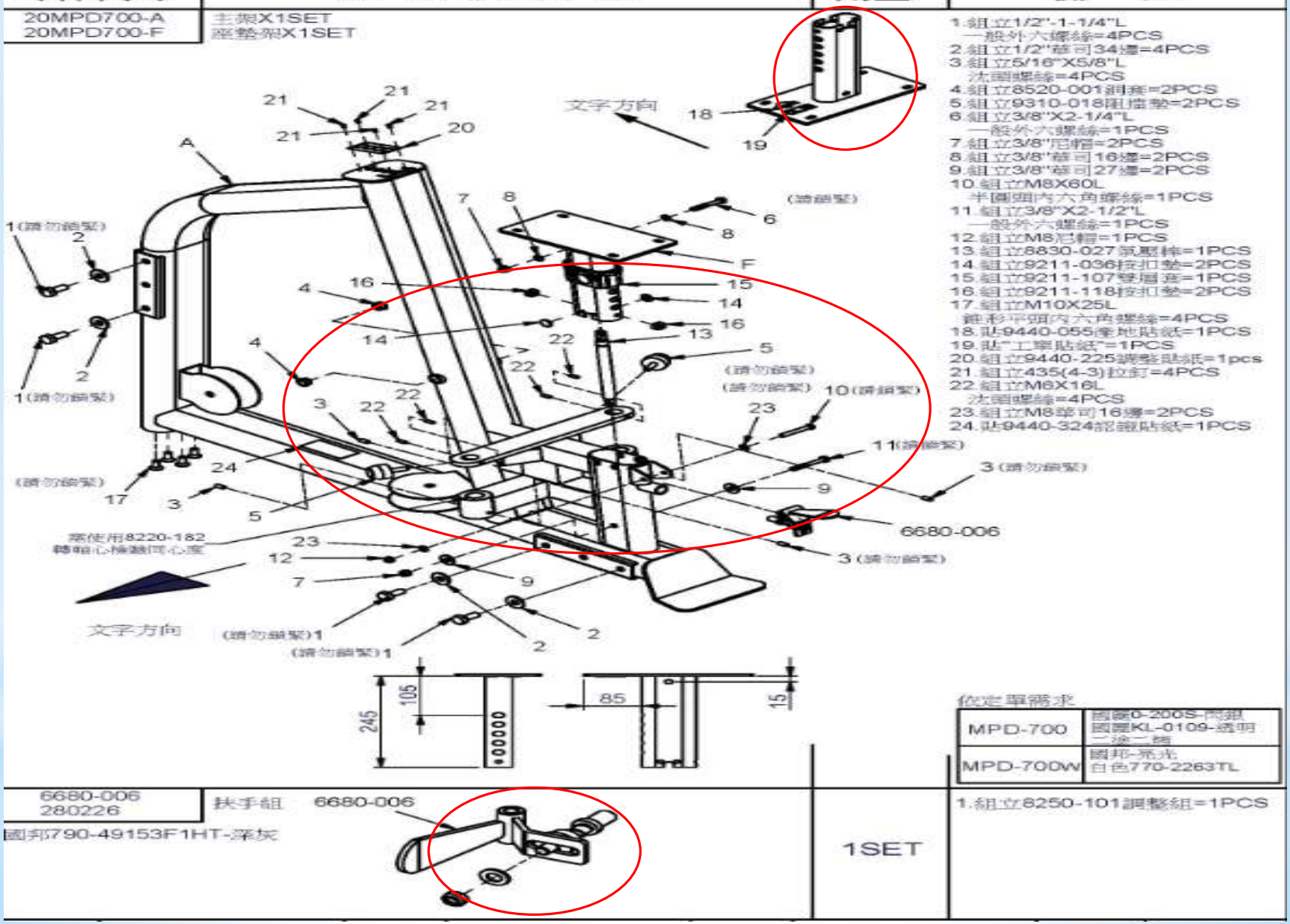

1.組立1/2"-1-1/4"L
一般外六螺絲=4PCS
2.組立1/2"華司34邊=4PCS
3.組立5/16"X5/8"L
沈頭螺絲=4PCS
4.組立8520-001調座=2PCS
5.組立9310-018阻擋墊=2PCS
6.組立3/8"X2-1/4"L
一般外六螺絲=1PCS
7.組立3/8"尼帽=2PCS
8.組立3/8"華司16邊=2PCS
9.組立3/8"華司27邊=2PCS
10.組立M8X60L
半圓頭內六角螺絲=1PCS
11.組立3/8"X2-1/2"L
一般外六螺絲=1PCS
12.組立M8尼帽=1PCS
13.組立8830-027氣壓桿=1PCS
14.組立9211-036按扣墊=2PCS
15.組立9211-107管層套=1PCS
16.組立9211-118按扣墊=2PCS
17.組立M10X25L
錐形平頭內六角螺絲=4PCS
18.貼9440-055產地貼紙=1PCS
19.貼"工率貼紙"=1PCS
20.組立9440-225調整貼紙=1pcs
21.組立435(4-3)拉釘=4PCS
22.組立M6X16L
沈頭螺絲=4PCS
23.組立M8華司16邊=2PCS
24.貼9440-324認證貼紙=1PCS

依定單需求

MPD-700	國產0-200S-閃銀 國豐KL-0109-透明 一塗二麵
MPD-700W	國邦-亮光 白色770-2263TL

6680-006 280226 國邦790-49153F1HT-深灰	扶手組	1SET	1.組立8250-101調整組=1PCS

零件代碼	品 名 及 圖 案	用量	備 註
20MPD700-B	連接管 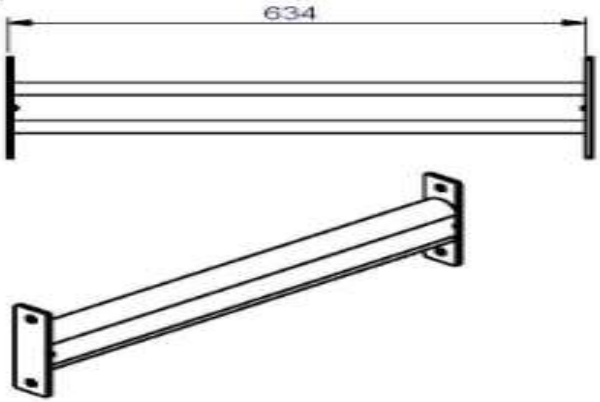	1SET	依定單需求 MPD-700 國都0-200S-閃銀 國景KL-0109-透明 二塗二烤 MPD-700W 國邦-亮光 白色770-2263TL
20MPD700-C	連接管 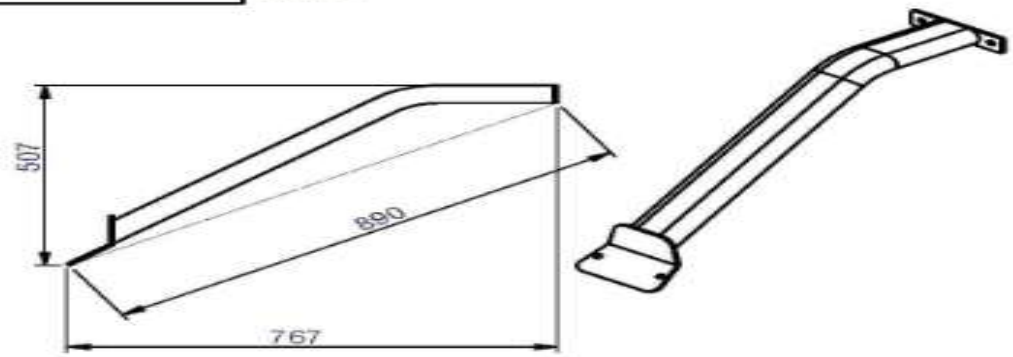	1SET	依定單需求 MPD-700 國都0-200S-閃銀 國景KL-0109-透明 二塗二烤 MPD-700W 國邦-亮光 白色770-2263TL
20MPD700-F	座墊架 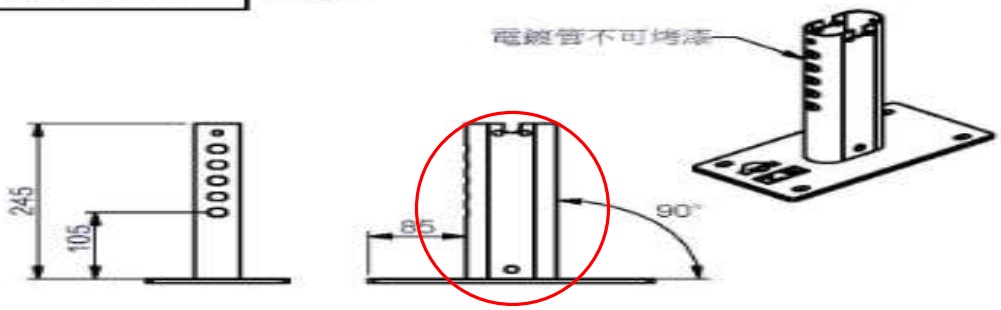	1SET	依定單需求 MPD-700 國都0-200S-閃銀 國景KL-0109-透明 二塗二烤 MPD-700W 國邦-亮光 白色770-2263TL 20MBP100-F 20MLM300-H 20MPD700-F共用

零件代碼	品 名 及 圖 案	用量	備 註
20MPD700-D1	扶手架 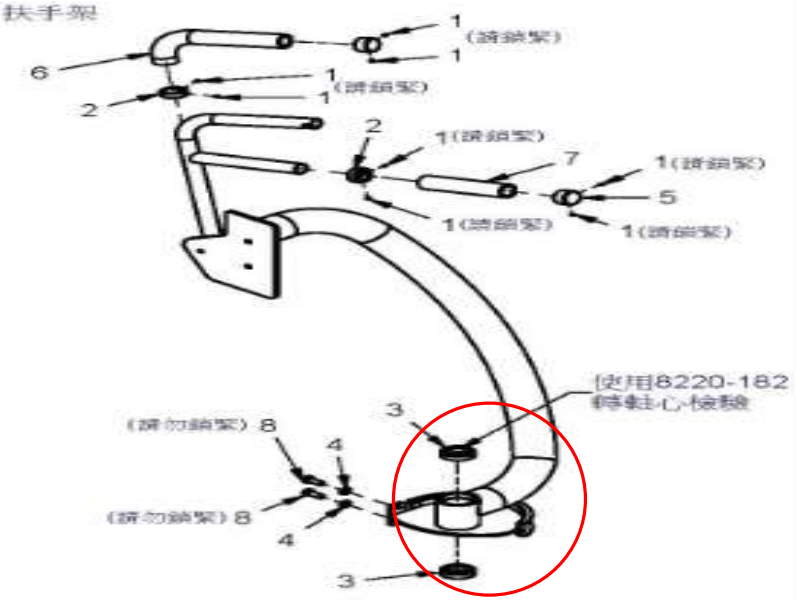	1SET	1.組立3/16"X3/16" 沈頭螺絲=8PCS 2.組立8130-250束子=2PCS 3.組立8510-018軸承=2PCS 4.組立M10彈簧華司=2PCS 5.組立8890-006緩衝=2PCS 6.組立9162-215 PVC浸漬把手=1PCS 7.組立9162-163 PVC浸漬把手=1PCS 8.組立M10X25L 半圓頭內六角螺絲=2PCS 依定單需求 MPD-700 國豐0-200S-閃銀 國豐KL-0109-透明 二塗二烤 MPD-700W 國邦-亮光 白色770-2263TL
20MPD700-E1	扶手架 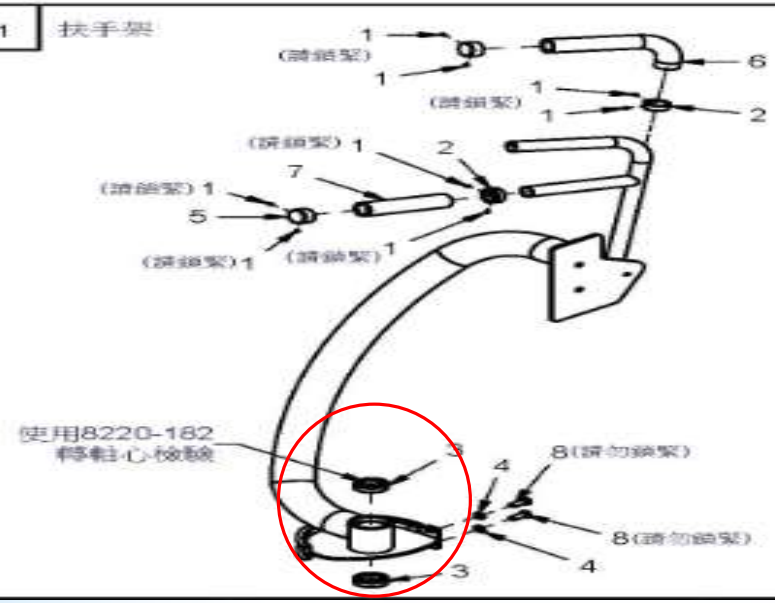	1SET	1.組立3/16"X3/16" 沈頭螺絲=8PCS 2.組立8130-250束子=2PCS 3.組立8510-018軸承=2PCS 4.組立M10彈簧華司=2PCS 5.組立8890-006緩衝=2PCS 6.組立9162-215 PVC浸漬把手=1PCS 7.組立9162-163 PVC浸漬把手=1PCS 8.組立M10X25L 半圓頭內六角螺絲=2PCS 設變單號 2018120001 依定單需求 MPD-700 國豐0-200S-閃銀 國豐KL-0109-透明 二塗二烤 MPD-700W 國邦-亮光 白色770-2263TL

零件代碼	品 名 及 圖 案	用量	備 註
6640-009 國麗3124S-閃銀 國麗KL0002-透明 二塗二烤	單吊輪座 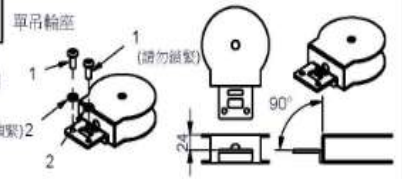 HLMPD700A	1SET	1.組立M10X25L 半圓頭內六角螺絲=2PCS 2.組立M10彈簧華司=2PCS 依定單需求 MPD-700 國麗0-200S-閃銀 國麗KL-0109-透明 二塗二烤 MPD-700W 國邦-亮光 白色770-2263TL
6650-004 6680-005(280225) 背墊架 扶手組	鋼套部分需使用 8260-069雙頭螺絲檢驗同心度 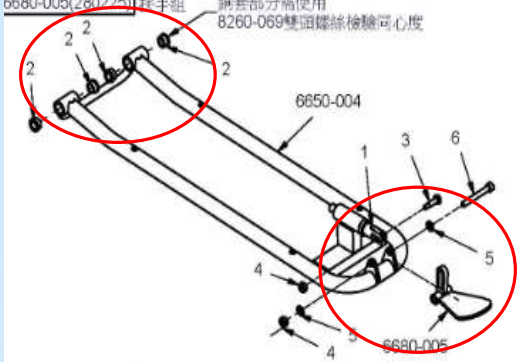 	1SET	1.組立8250-120調整組=1PCS 2.組立8520-001網套=4PCS 3.組立8260-057(M8)螺絲=1PCS 4.組立M8尼帽=2PCS 5.組立M8華司16塵=2PCS 6.組立M8X65L 圓頭內六角螺絲=1PCS 依定單需求 MPD-700 國麗0-200S-閃銀 國麗KL-0109-透明 二塗二烤 MPD-700W 國邦-亮光 白色770-2263TL
8220-182 電鍍	轉軸心  	2SET	1.組立M10X25L 鈹彫平頭內六角螺絲=4PCS HLMPD700A
8260-069 電著	雙頭螺絲 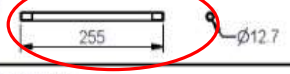 	1PCS	HLMPD700A Ø12.7X255L
9420-103	MPD700動作圖銘板	1PCS	9630-126氣泡袋X1 160X460XB-平口
23MPD700A	附件包 23MPD700WA 附件包	1SET	HLMPD700A
25MPD700B	皮帶輪包	1SET	HLMPD700A
FMPD700A1 FMPD700B	4270mm平面皮帶 1500mm平面皮帶 	1SET	設變單號 2019030004 HLMPD700A
GMPD700A	螺絲包	1SET	HLMPD700A
KMPD700	說明書	1SET	

零件代碼	品名及圖案	用量	備註
	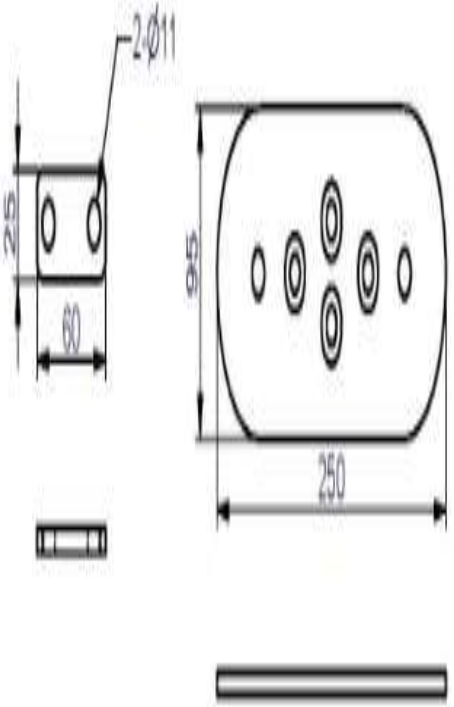 8311-117固定片 60X25X6T=3PCS 8313-144固定片 95X6TX250L=1PCS		HLMPD700A 塑料零件烤漆顏色 依定單需求 MPD-700 國麗0-200S-閃銀 國麗KL-0109-透明 二塗二烤 MPD-700W 國邦-亮光 白色770-2263TL

零件代碼	品 名 及 圖 案	用量	備 註
6610-014	門框=1SET 依定單需求 MPD-700 國豐0-200S-閃銀 國豐KL-0109-透明 二塗二烤 MPD-700W 國邦-亮光 白色770-2263TL 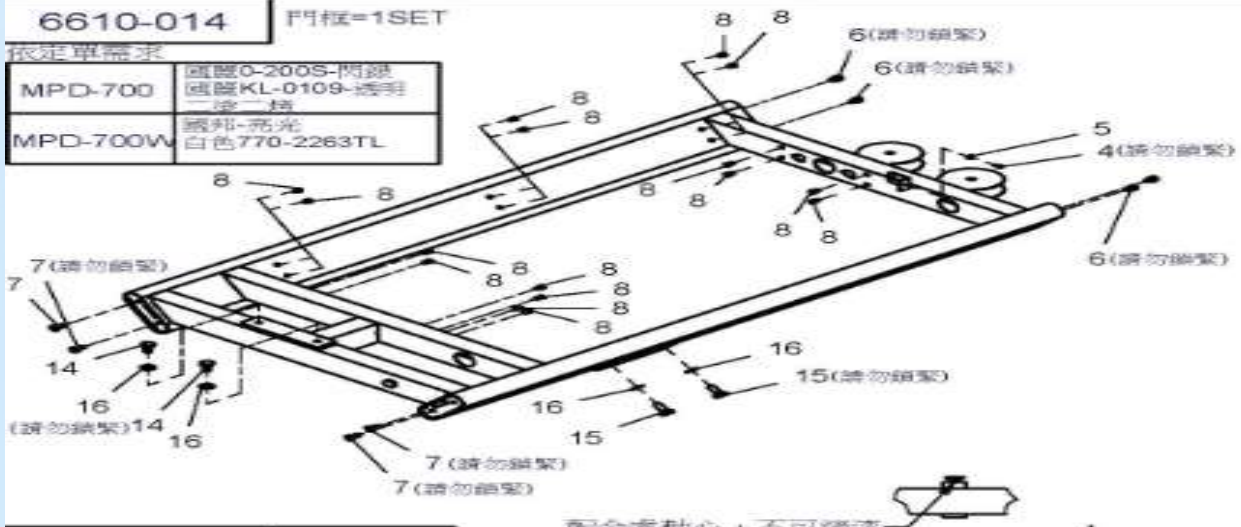	1SET	1. 2. 3.組立8520-008調整可=2PCS 4.組立M6X12L 半圓頭內六角螺絲=1PCS 5.組立M6華司Ø13=1PCS 6.組立M10X12L 圓頭內六角-CAP螺絲=4PCS 7.組立M10X25L 錐形內六角螺絲=5PCS 8.組立M6拉桿 (身體有花)=16PCS 9. 10. 11. 12. 13. 14.組立1/2"x1"L 一般外六角螺絲=2PCS 15.組立1/2"x1-1/4"L 一般外六角螺絲=2PCS 16.組立1/2"華司Ø25=4PCS 17.組立8130-231端蓋=1PCS
6640-011	單吊輪座 配合滾軸心，不可烤漆 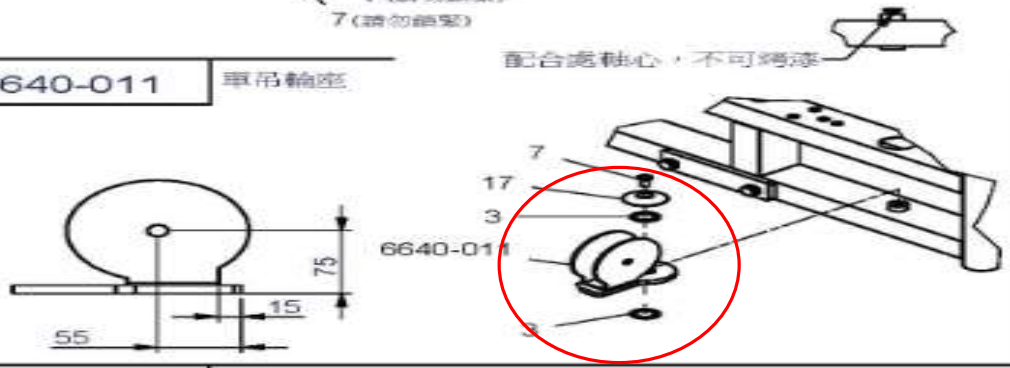	1SET	依定單需求 MPD-700 國豐0-200S-閃銀 國豐KL-0109-透明 二塗二烤 MPD-700W 國邦-亮光 白色770-2263TL 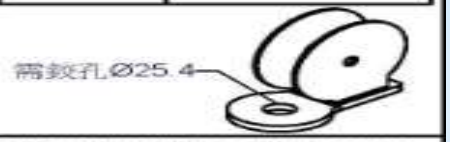
9220-017	護網 壓克力護網- 珍珠白霧面 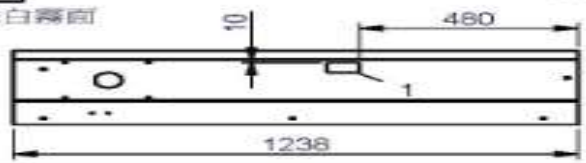	1PCS	1.貼9440-117防夾手貼紙=1PCS
9220-018	護網 壓克力護網- 珍珠白霧面 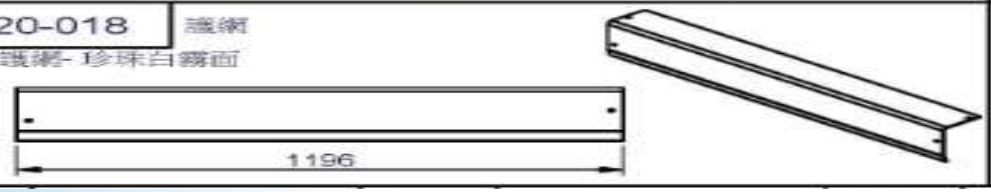	1PCS	設變單號 2019030004

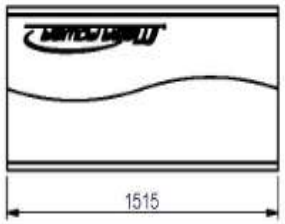





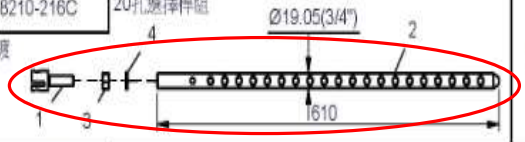

零件代碼	品名及圖案	用量	備註
9220-023 壓克力護網- 透明黑	護網 1515	1PCS	
9211-148	上蓋 1 文字向上	1SET	1. 貼9441-370=2PCS 鋁標(Steelflex) H9211148
8400-033	選擇上片	1SET	HLMPD700B
8210-216C 電鍍	20孔選擇桿組 Ø19.05(3/4") 4 2 1 3 610	1SET	1.組立8260-076固定桿=1PCS 2.組立8210-216 20孔選擇桿=1PCS 3.組立1/2"螺帽=1PCS 4.組立1/2"彈簧華司=1PCS
8331-057	L型片 (請勿鎖緊)1 2 133.5 HLMPD700B	4SET	1.組立M6X12L 半圓頭內六角螺絲=4PCS 2.組立M6華司Ø13=4PCS 依定單需求 MPD-700 國麗0-200S-閃銀 MPD-700W 國邦-亮光 白色770-2263TL
8313-169 電鍍	固定片 (請勿鎖緊)1 2 2 1(請勿鎖緊) HLMPD700B	1PCS	1.組立M10X25L 半圓頭內六角螺絲=2PCS 2.組立M10彈簧華司=2PCS

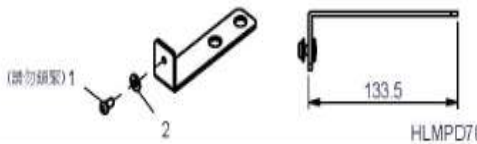







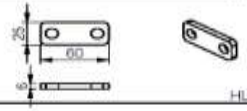

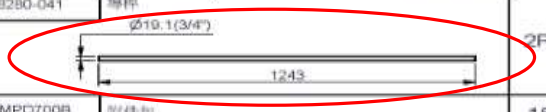

零件代碼	品名及圖案	用量	備註
8331-058	L型片 2 (請勿鎖緊) 1 HLMPD700B	3SET	1.組立M6X12L 半圓頭內六角螺絲=3PCS 2.組立M6華司-Ø13=3PCS 依定單需求 MPD-700 國麗0-200S-閃銀 MPD-700W 國邦-亮光 白色770-2263TL
8313-144	固定片 95 250 HLMPD700B	2PCS	依定單需求 MPD-700 國麗0-200S-閃銀 國麗KL-0109-透明二連二轉 MPD-700W 國邦-亮光 白色770-2263TL
8311-117	L型片 25 60 6 HLMPD700B	1PCS	依定單需求 MPD-700 國麗0-200S-閃銀 MPD-700W 國邦-亮光 白色770-2263TL
8280-041	導桿 Ø19.1(3/4") 1243	2PCS	
23MPD700B	附件包	1SET	HLMPD700B
23MDCUP	附件包-CUP	1SET	HLMPD700B
25MPD700B	皮帶輪包	1SET	HLMPD700B
GMPD700B	螺絲包	1SET	HLMPD700B
8331-056	L型片 2 1 HLMPD700B	1SET	1.組立M6X12L 半圓頭內六角螺絲=1PCS 2.組立M6華司-Ø13=1PCS 依定單需求 MPD-700 國麗0-200S-閃銀 MPD-700W 國邦-亮光 白色770-2263TL
			設變單號 2019030004
8311-194 K32027G 深灰砂	固定片 3-Ø19.5 38 167 2 HLMPD700B	1PCS	設變單號 2019030004
			9180-028特固腿X2 9630-009束帶X5 9630-031氣泡袋X1 9630-064氣泡布X1 9630-080氣泡布X1 9630-151氣泡袋X1 9630-176蜂巢紙X8



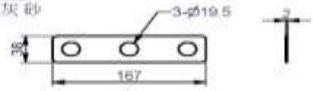

零件代碼	品名及圖案	用量	備註
9111-069	背墊 黑色耐寒乳膠皮 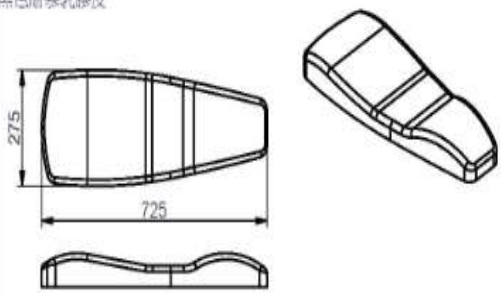	1PCS	
9121-070	座墊 黑色耐寒乳膠皮 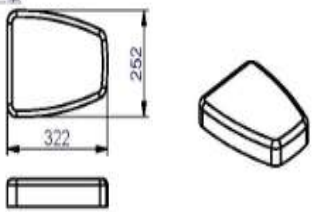	1PCS	
9131-024	肘墊 黑色耐寒乳膠皮 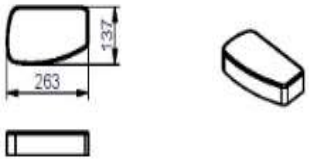	1PCS	設變單號 2010010001
9131-027	肘墊 黑色耐寒乳膠皮 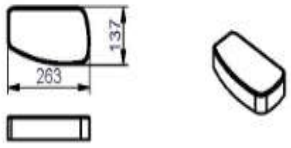	1PCS	

零件代碼	品名及圖案	用量
9111-069R	背墊 紅色耐寒乳膠皮 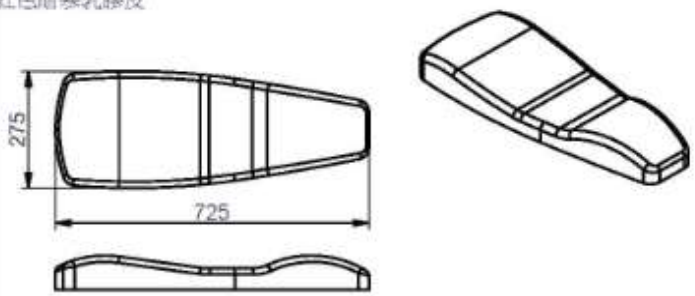	1PCS
9121-070R	座墊 紅色耐寒乳膠皮 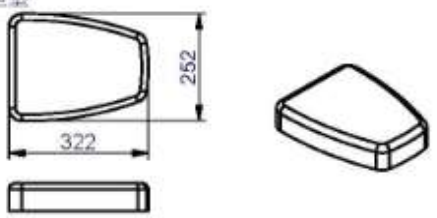	1PCS
9131-024R	肘墊 紅色耐寒乳膠皮 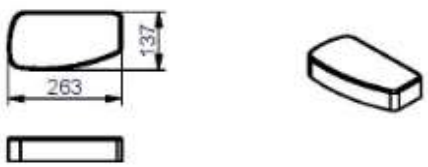	1PCS
9131-027R	肘墊 紅色耐寒乳膠皮 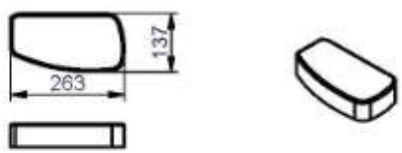	1PCS

MPD-700 ASSEMBLY INSTRUCTIONS

HARDWARE ILLUSTRATION

D1.Ø60 CAP COVER(8130-231)---------- [4PCS]
D2.Ø10X60 SHAFT(8210-156)---------- [2PCS]
D3.Ø1" CU WASHER(8520-008)---------- [2PCS]
D4.Ø30X27L STOPPER(9310-021)---------- [2PCS]
D5.108X263 RUBBER PAD(9310-075)---------- [1PCS]
D6.Ø115 PULLEY(9213-42B)---------- [3PCS]
D7.4470mm BELT(FMPD700A2)---------- [1PCS]
D8.1500mm BELT(FMPD700B)---------- [1PCS]
D9.EXERCISE CHART (9420-103)---------- [1PCS]
D10.ROLLER THRUST BEARING(8510-008)---------- [2PCS]

D1 D2 D3 D4



D5 D6



D9 D10

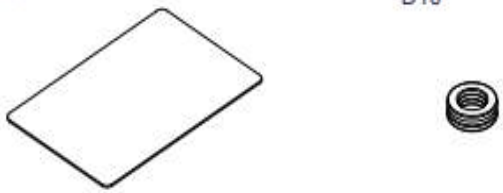

MPD-700 ASSEMBLY INSTRUCTIONS

DOOR FRAME HARDWARE ILLUSTRATION

D11.3/4" SHAFT COLLAR(9211-147)---------- [2PCS]
D12.Ø4" RUBBER PAD(9310-017)---------- [2PCS]
D13.108X263 RUBBER PAD(9310-075)---------- [2PCS]

D15.Ø115 PULLEY(9213-42B)---------- [3PCS]
D16.BOTTLE BRACKET(8388-025)---------- [1PCS]
D17.BOTTLE RACK(9260-320)---------- [1PCS]
D18.BOTTLE(9260-123)---------- [1PCS]

D11 D12 D13



D15



D16 D17 D18

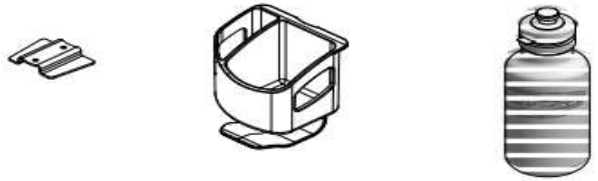

MPD-700 ASSEMBLY INSTRUCTIONS

FRAME HARDWARE ILLUSTRATION FOR MDAG

D21.TOP PLATE(8400-033)----------[1PCS]
D22.3/4" SHAFT COLLAR(9211-167)----------[2PCS]
D23.Selector Rod(8210-216C)----------[1PCS]

D21 D22 D23



MPD-700 ASSEMBLY INSTRUCTIONS

PARTS ILLUSTRATION SHEET

A[1PCS]

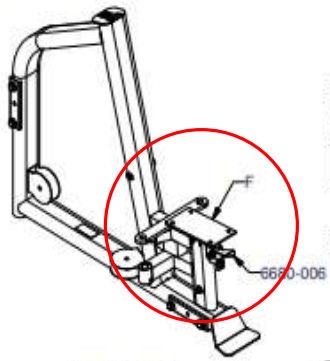

B1[1PCS]

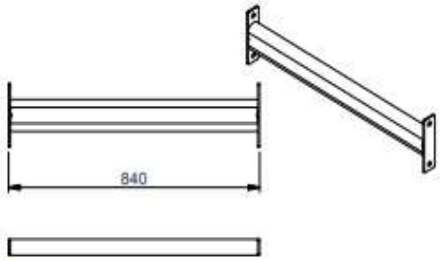

C1[1PCS]

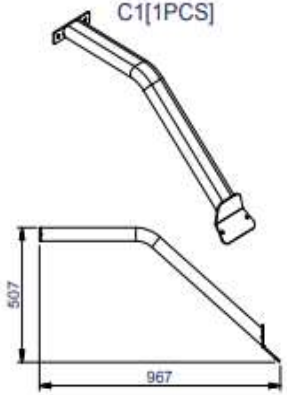

D2[1PCS]

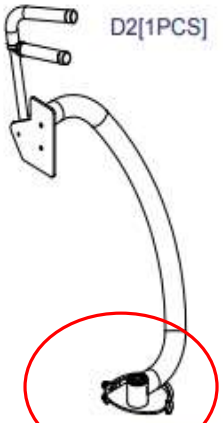

E2[1PCS]



G[1PCS]
6640-009

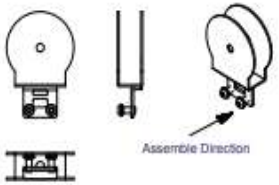

H[1PCS]
6650-004

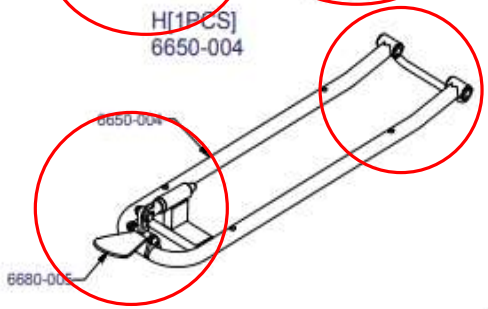

MPD-700 ASSEMBLY INSTRUCTIONS

PARTS ILLUSTRATION SHEET

I[2PCS]
8220-182
Ø25x179L

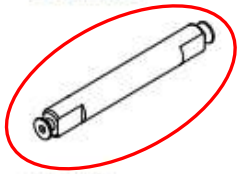

J[1PCS]
8260-069

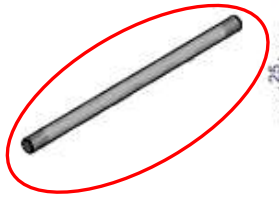

K[3PCS]
8311-117
60X25X6T

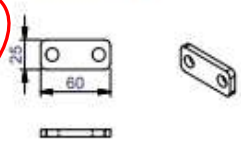

L[1PCS]
8313-144
95X6TX250

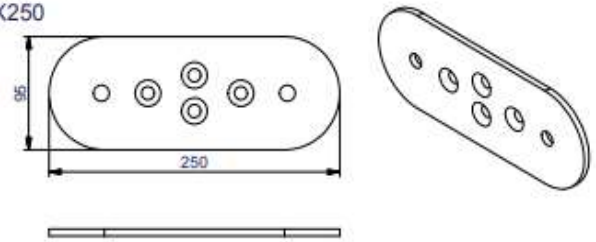

M[1PCS]
9111-069

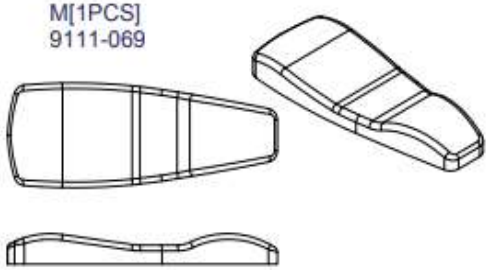

N[1PCS]
9121-070

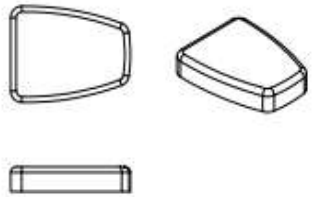

O[1PCS]
9131-024

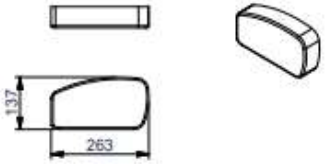

P[1PCS]
9131-027

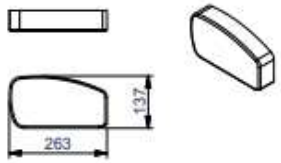

MPD-700 ASSEMBLY INSTRUCTIONS

DOOR FRAME PARTS ILLUSTRATION SHEET

AA1[1PCS]

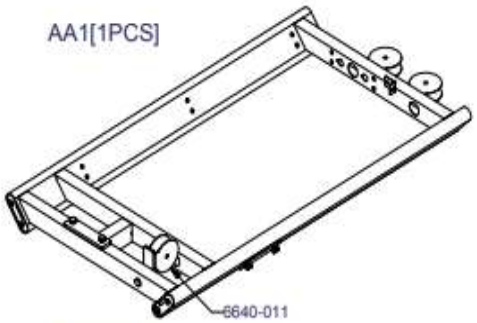

AC1[1PCS]
9220-017

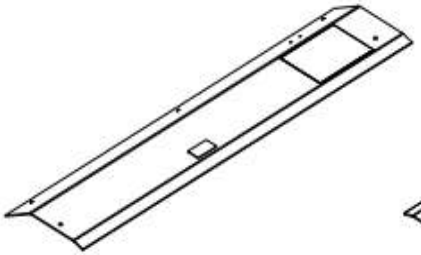

AD[1PCS]
9220-018

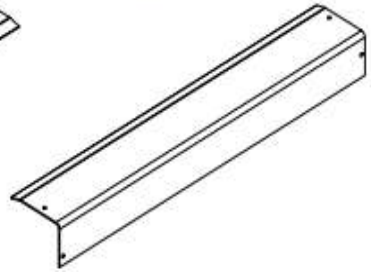

AE[1PCS]
9220-023

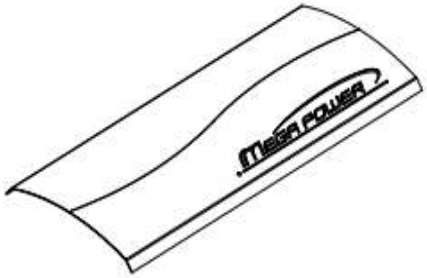

AF[1PCS]
9211-148



MPD-700 ASSEMBLY INSTRUCTIONS

DOOR FRAME PARTS ILLUSTRATION SHEET

AH[4PCS]
8331-057

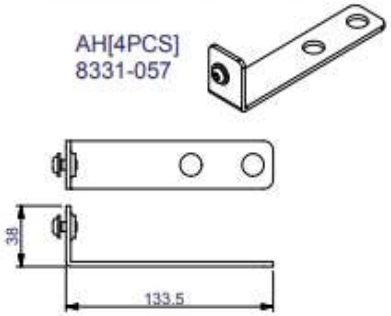

AI[1PCS]
8313-169

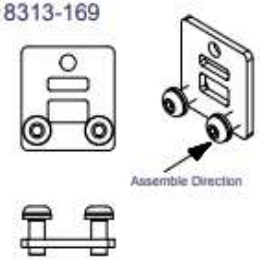

AJ[3PCS]
8331-058

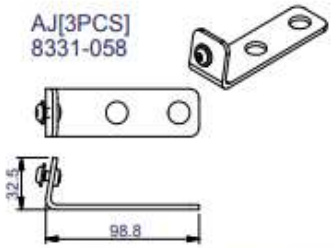

AK[2PCS]
8313-144

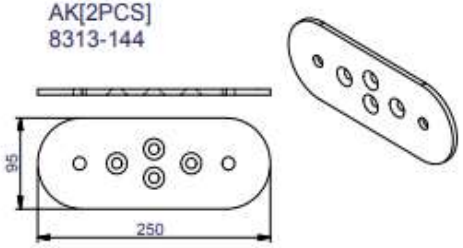

AL1[2PCS]
8280-041
Ø3/4"X1245L



AM[1PCS]
8331-056

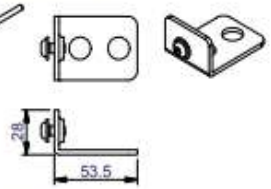

AP[1PCS]
8311-117

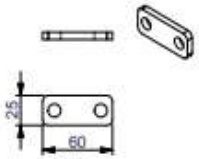

AR[1PCS]
8311-194

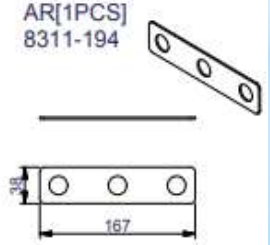

MPD-700 ASSEMBLY INSTRUCTIONS

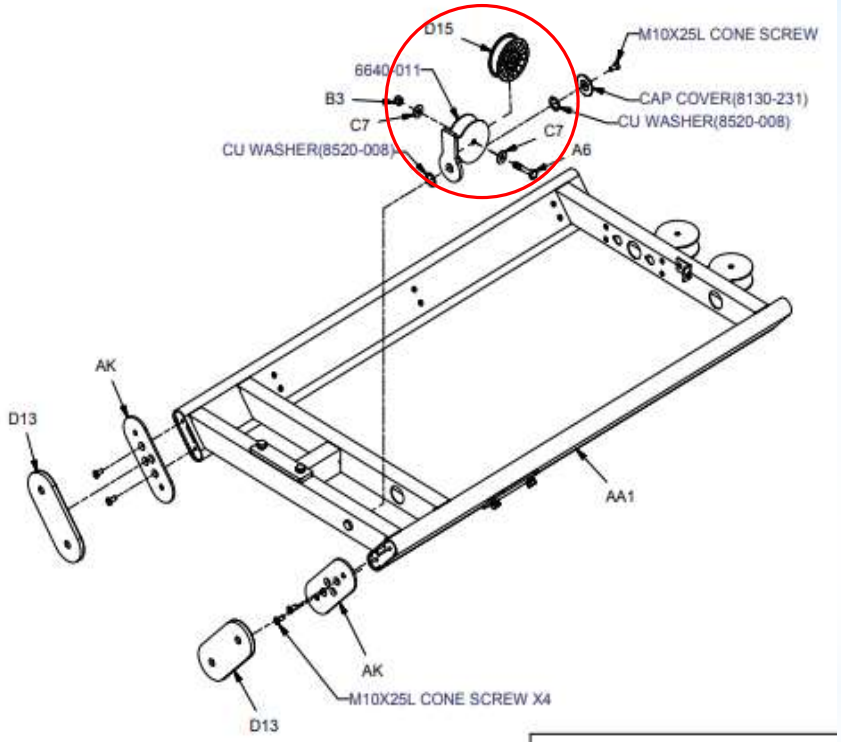

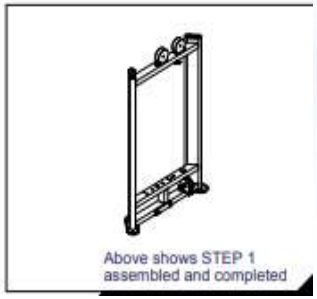

Above shows STEP 1
assembled and completed

MPD-700 ASSEMBLY INSTRUCTIONS

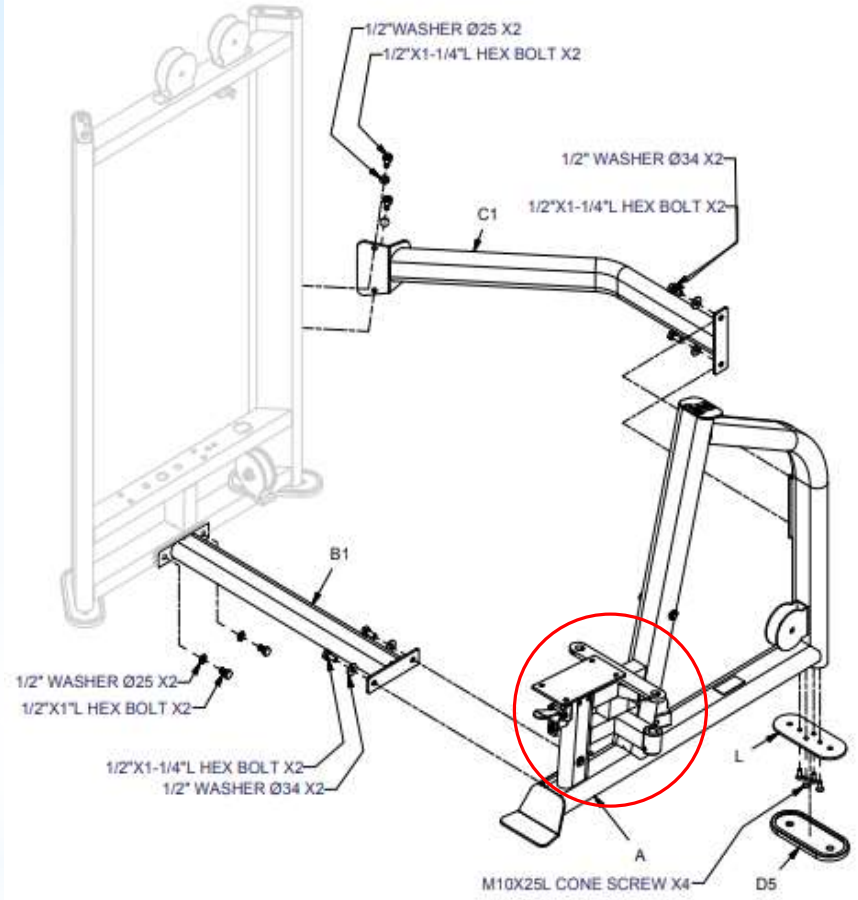

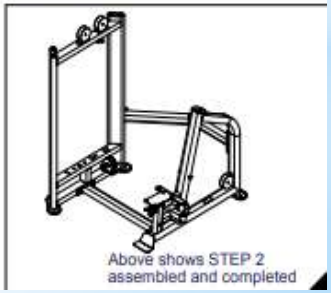

Above shows STEP 2
assembled and completed

MPD-700 ASSEMBLY INSTRUCTIONS

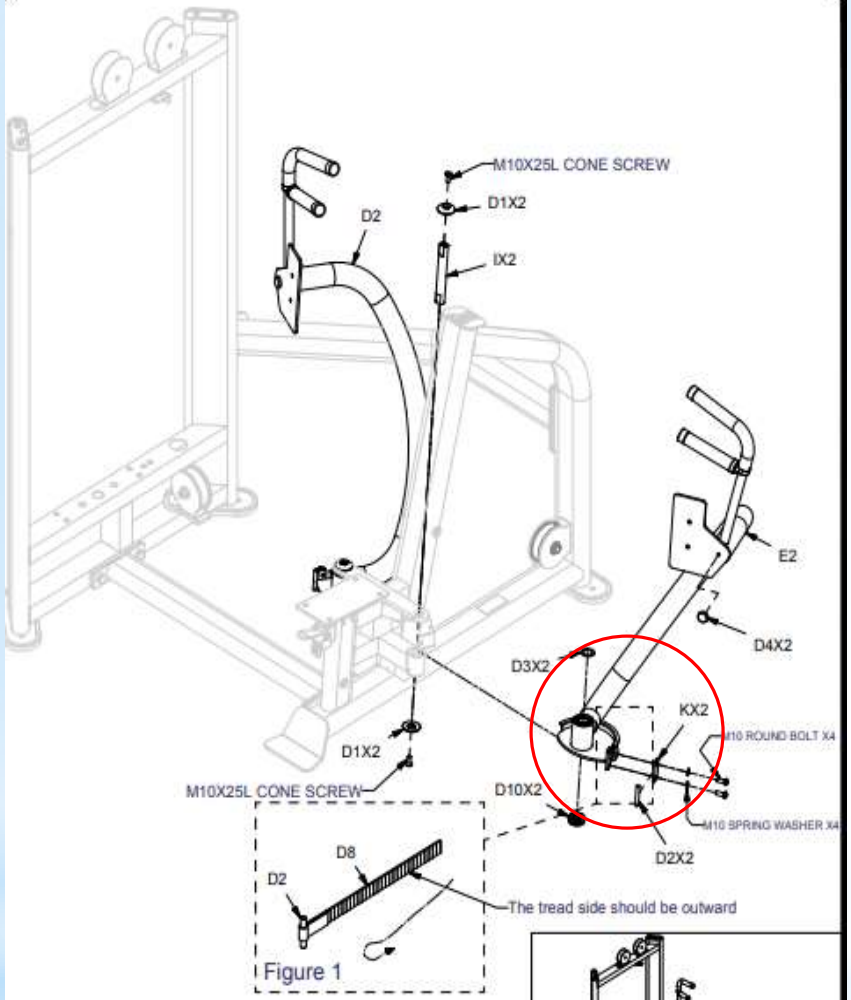

Figure 1

NOTE:
1. THE BELT SMOOTH SIDE SHOULD ATTACH ON PULLEY SURFACE, AND THE BELT SMOOTH SIDE WRAP AROUND THE BELT RETAINER SHAFT (G)
2. PLEASE BE SURE THE PRESSURE BETWEEN THE BELT CLAMPS (K) DO NOT EXCEED 70 PSI

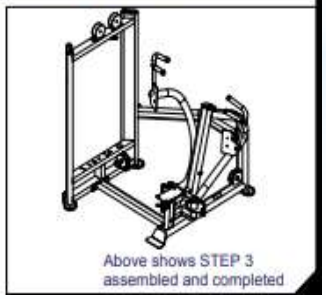

Above shows STEP 3 assembled and completed

MPD-700 ASSEMBLY INSTRUCTIONS

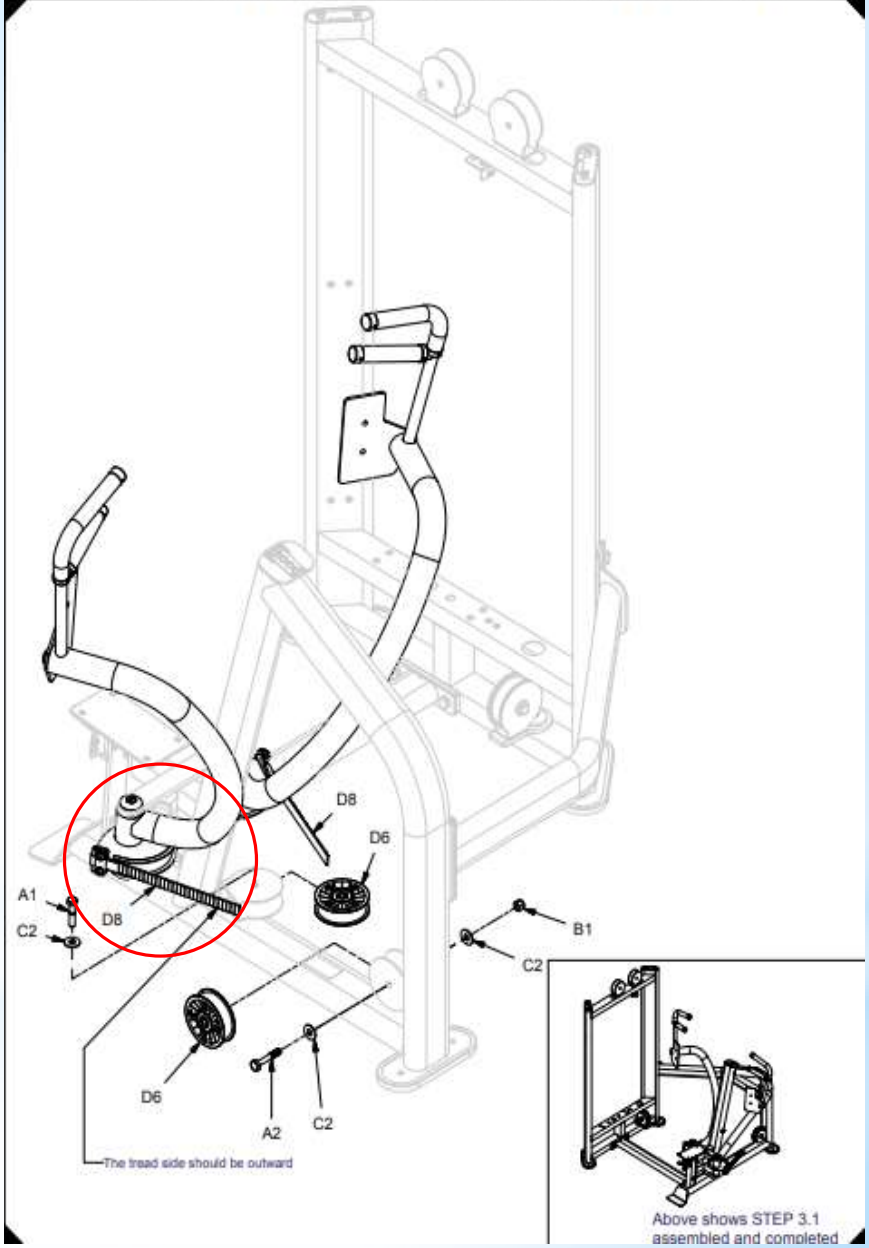

Above shows STEP 3.1 assembled and completed

MPD-700 ASSEMBLY INSTRUCTIONS

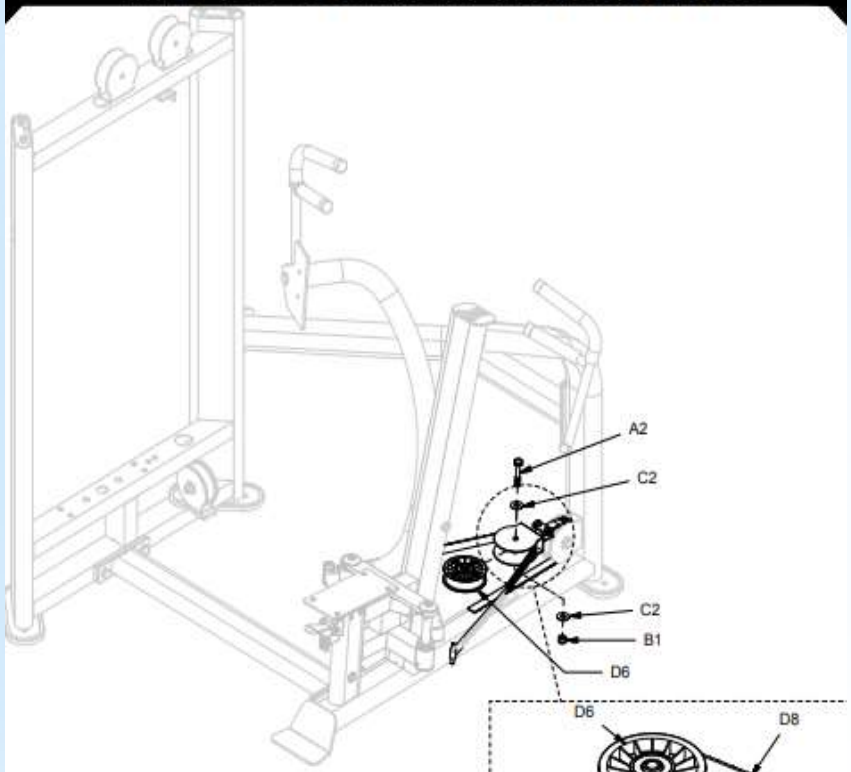

Figure 3

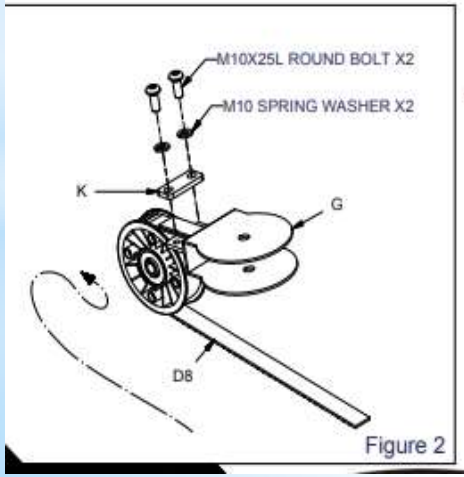

Figure 2

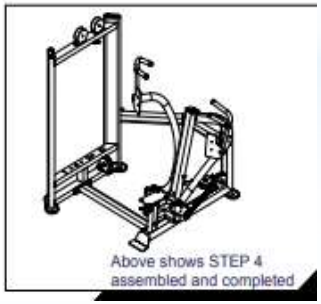

Above shows STEP 4 assembled and completed

MPD-700 ASSEMBLY INSTRUCTIONS

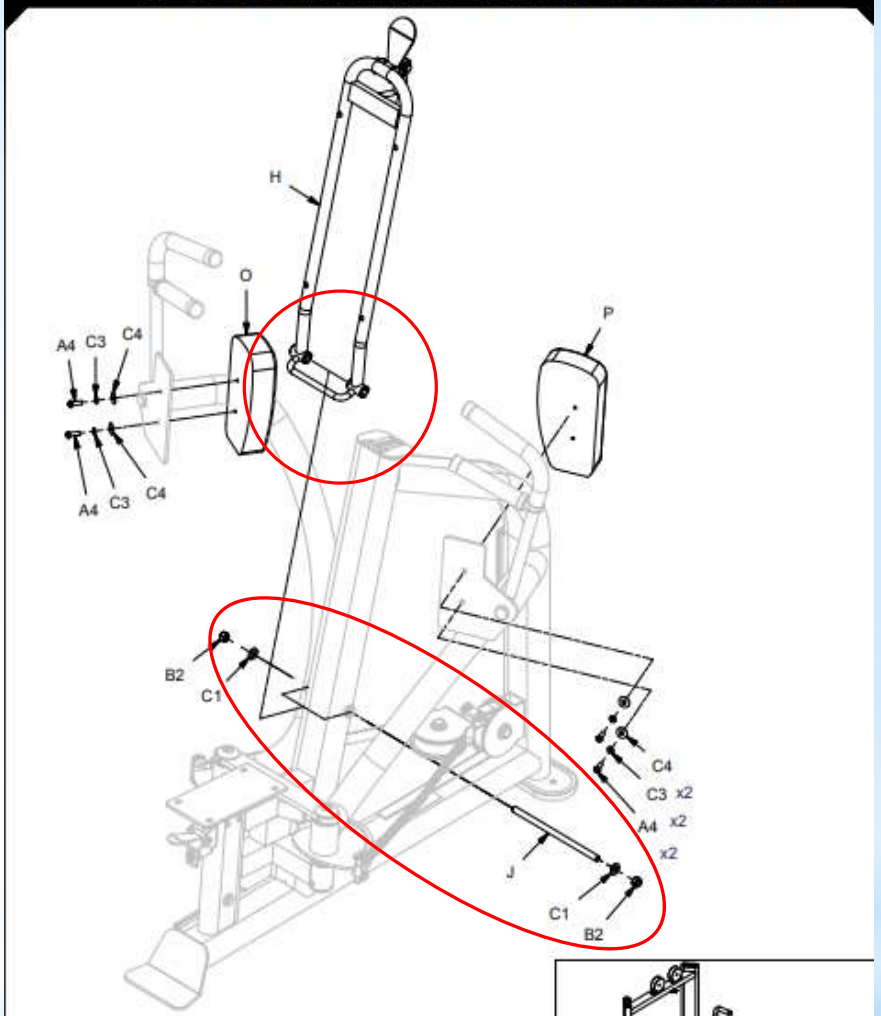

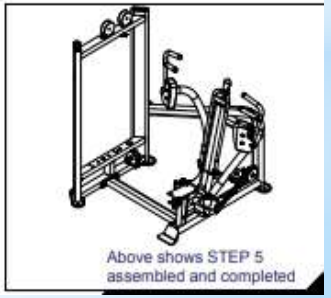

Above shows STEP 5 assembled and completed

MPD-700 ASSEMBLY INSTRUCTIONS

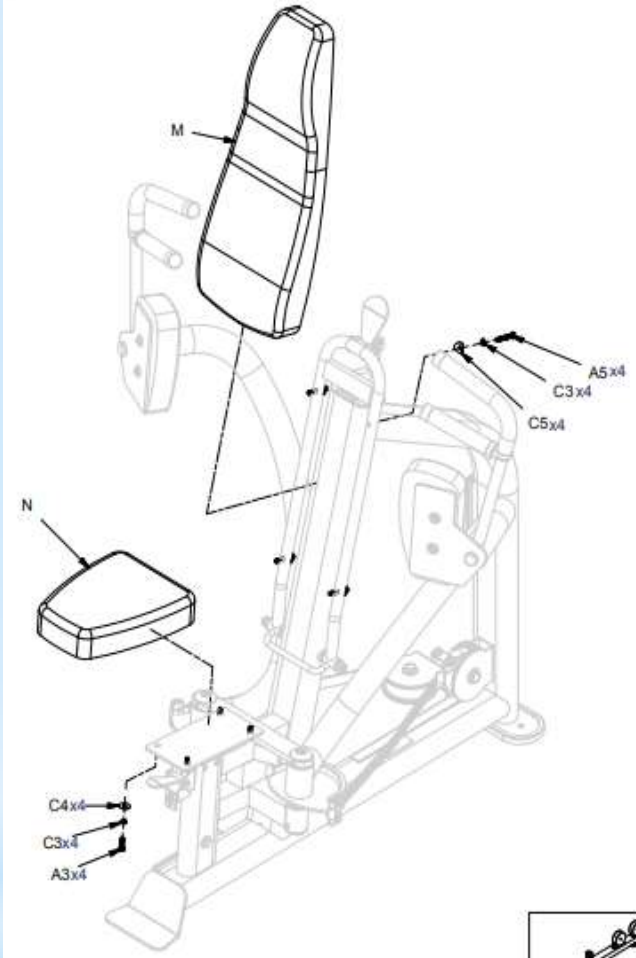



Above shows STEP 6
assembled and completed

MPD-700 ASSEMBLY INSTRUCTIONS

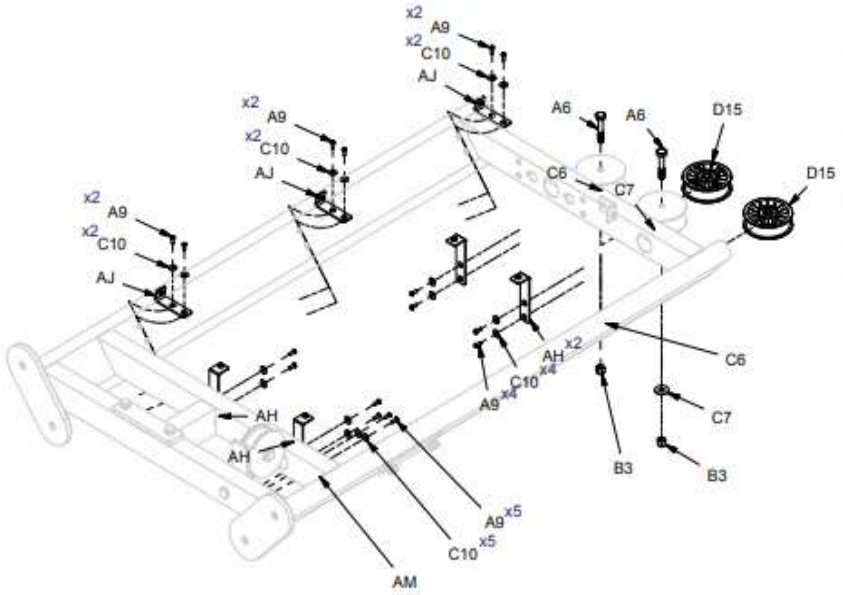



Above shows STEP 7
assembled and completed

MPD-700 ASSEMBLY INSTRUCTIONS

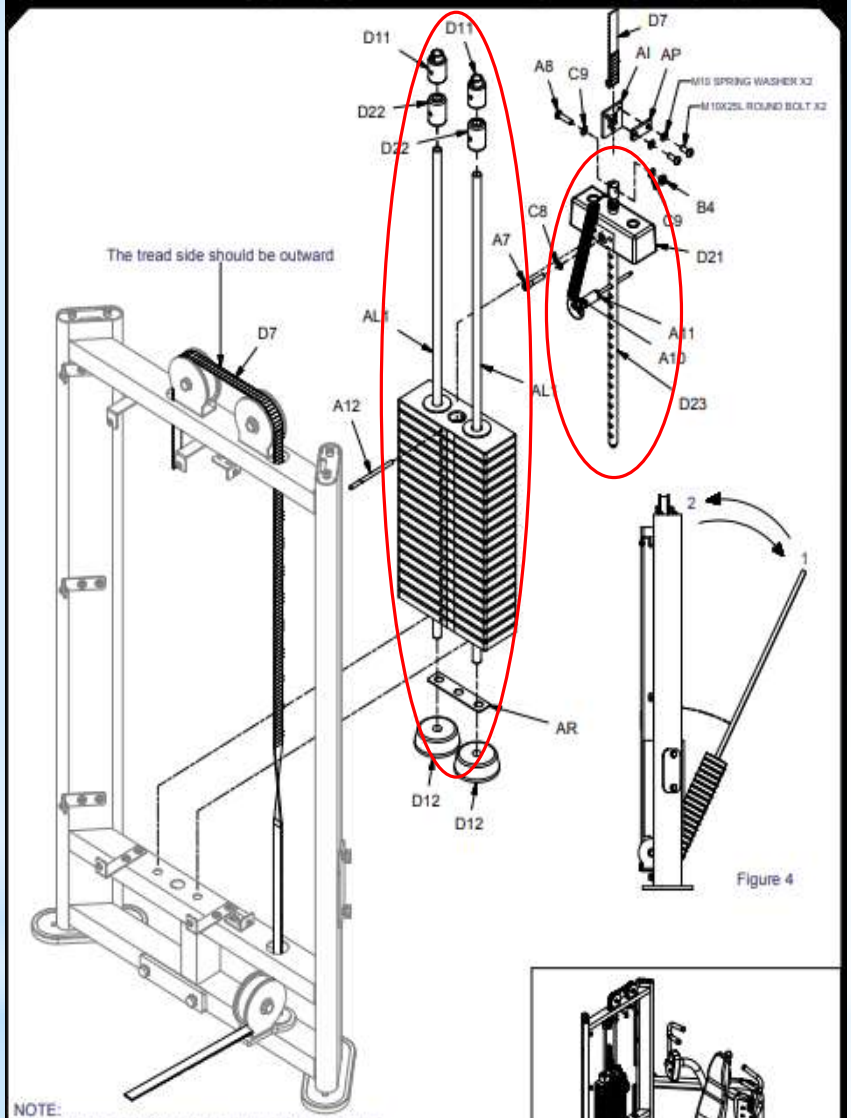

Figure 4

NOTE:
1. THE BELT SMOOTH SIDE SHOULD ATTACH ON PULLEY SURFACE, AND THE BELT SMOOTH SIDE WRAP AROUND THE BELT RETAINER SHAFT (AI)
2. PLEASE BE SURE THE PRESSURE BETWEEN THE BELT CLAMPS (AP) DO NOT EXCEED 70 PSI

Above shows STEP 8 assembled and completed

MPD-700 ASSEMBLY INSTRUCTIONS

CAM BELT CONSTITUTE ILLUSTRATION

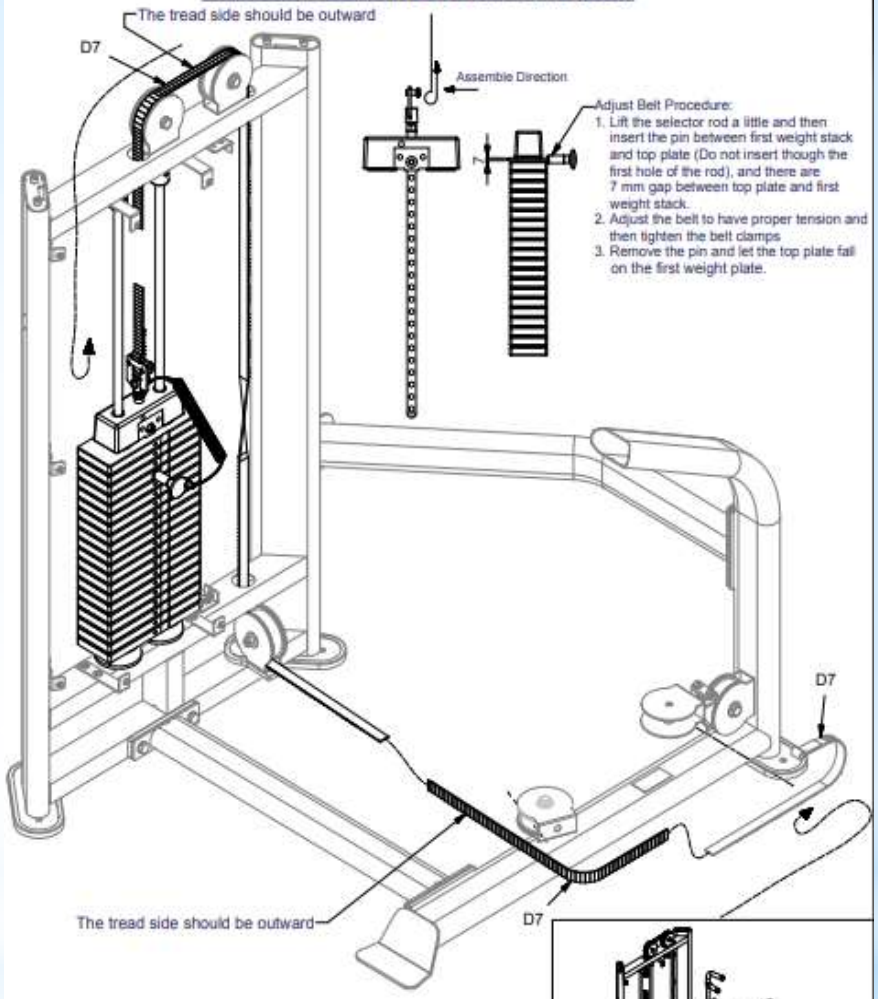

NOTE:
1. THE BELT SMOOTH SIDE SHOULD ATTACH ON PULLEY SURFACE, AND THE BELT SMOOTH SIDE WRAP AROUND THE BELT RETAINER SHAFT (AI)
2. PLEASE BE SURE THE PRESSURE BETWEEN THE BELT CLAMPS (AP) DO NOT EXCEED 70 PSI



Above shows STEP 8.1 assembled and completed

MPD-700 ASSEMBLY INSTRUCTIONS



Above shows STEP 9
assembled and completed

Post location

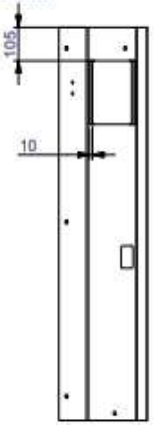

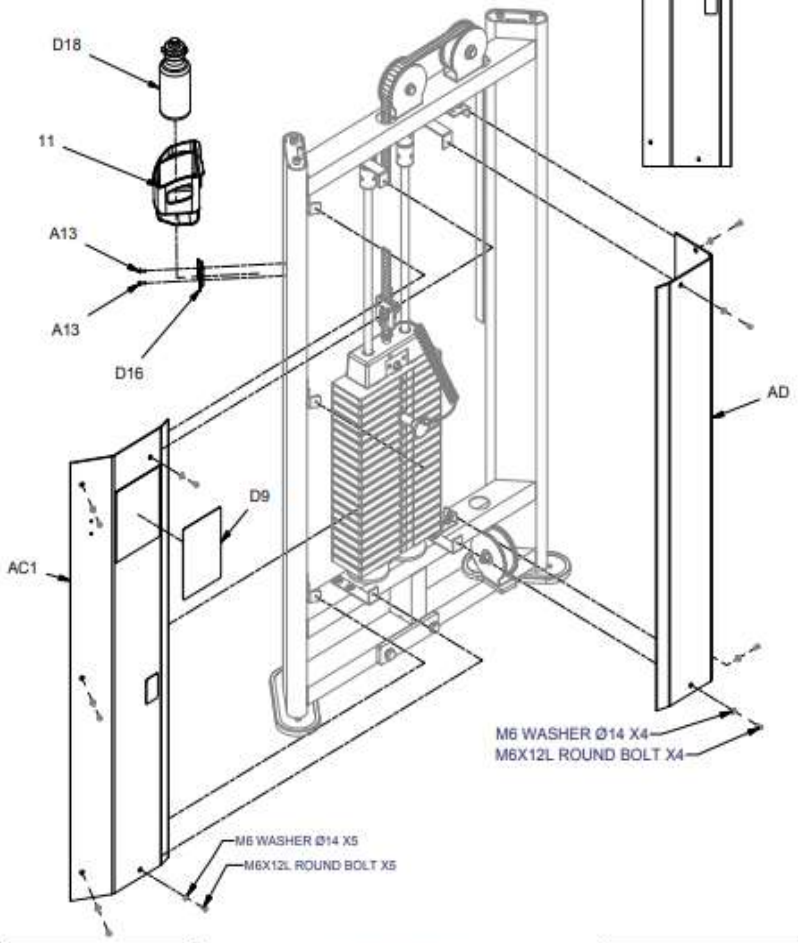

MPD-700 ASSEMBLY INSTRUCTIONS

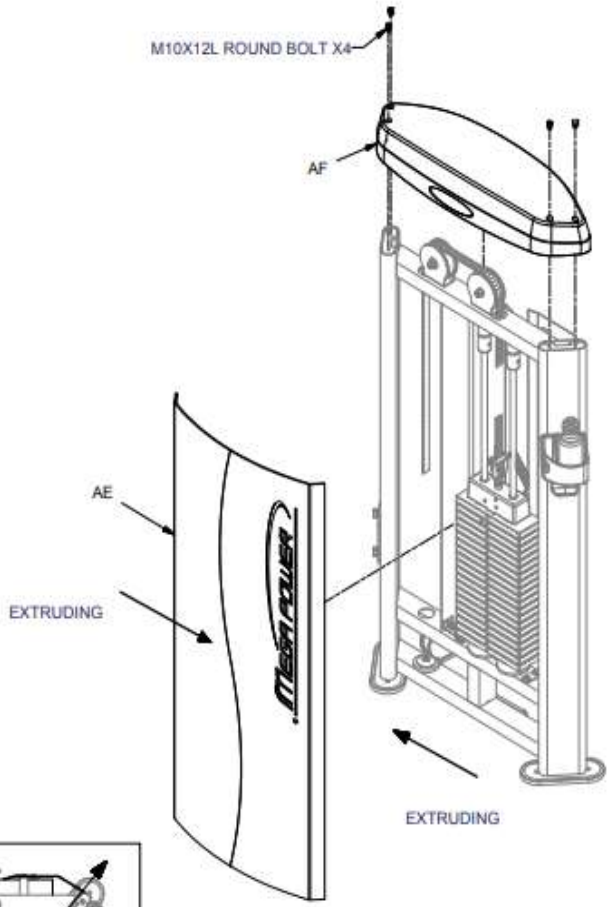

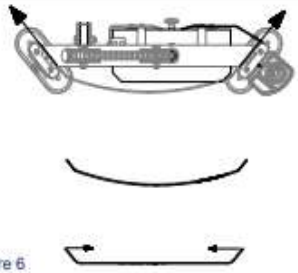

Figure 6

Note: When installing the shroud (AE), push both sides of the shroud toward center in order to bend it a little.
After insert it to the door frame and then releasing it. The shroud will be locked on the door frame.



Above shows STEP 10
assembled and completed

ASSEMBLY INSTRUCTIONS

Adjust Flat Belt Steps

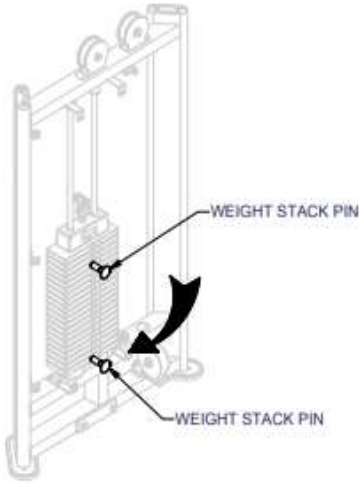

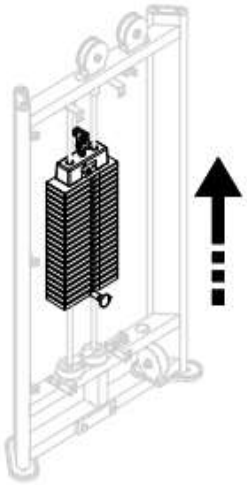

1. When installing flat belt, please put the weight stack pin into 4th weight stack. After installing flat belt, please put the weight stack pin into 20th weight stack.

2. When weight stack pin put into 20th weight stack, please do workout with the machine around 1 minute or 5-10 sets in order to extend the flat belt,flat belt will be loosed a little bit.

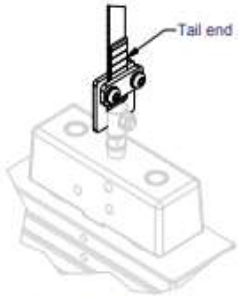

3. Pull end of flat belt as drawing showed to make the flat belt be tightened. (After using the machine 3 months to 6 months, please check flat belt.If the flat belt is loosed, please follow this step to tighten the belt again.)

Guide on Selector Rod Adjustment

STEP 1

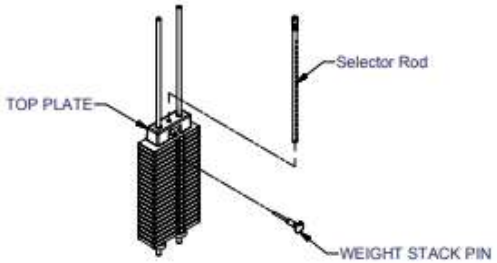

Step 1
Place Selector Rod into Top Plate.
Then put selector pin into the weight plate to fix the rod.

STEP 2



Step 2
Screw the 3/8"x2"L Round Allen Head into Top Plate but not tighten it up.

STEP 3

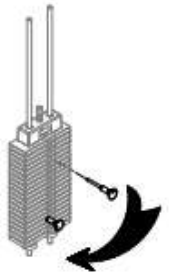

Step 3
Place the selector pin to each weight plate (5,10,15,20....) to check the smoothness.

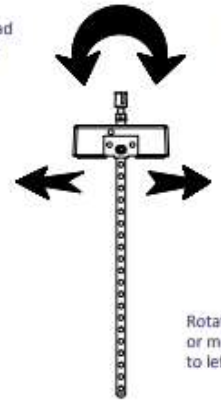

Rotate the Selector Rod slightly
or move the 3/8"x2"L Round Allen Head
to left and right and repeat Step 3.

MEGA POWER series
JUNGLE GYM series

project	Part number	Name	Specification	Quantity	Remark
1	38-200 CAP	round allen head	3/8"X2"L round allen head-CAP	1	
2	38-SPWAS 8732003	3/8" spring washer		1	
3	8210-216C	20 hole Selector Rod		1	
4	8250-166	pin	Ø7.9X137L	1	
5	8250-162	weight stack pin	Ø7X110L	1	
6	8400-010	10LB weight stack plate	102x22bx280L 10LB	20	
7	8400-033	top plate		1	

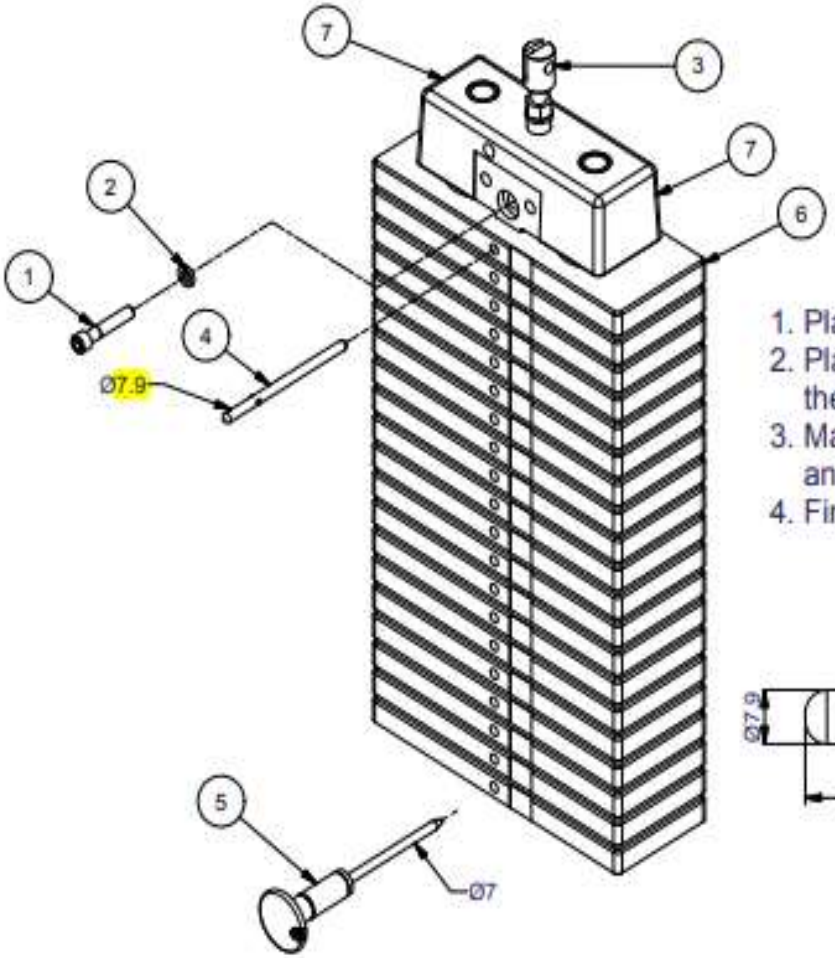

1. Place #4 - 8250-166 (pin) into the first weight plate.
2. Place #5 - 8250-162 (weight stack pin) into the the hole 20th of the weight stack.
3. Make sure #7 (top plate) cling to #6 (first weight plate) and fix in #1 - 3/8"X2"L screw and #2 - 3/8" spring washer.
4. Finally remove #5 - 8250-162 (weight stack pin) and use as usual.

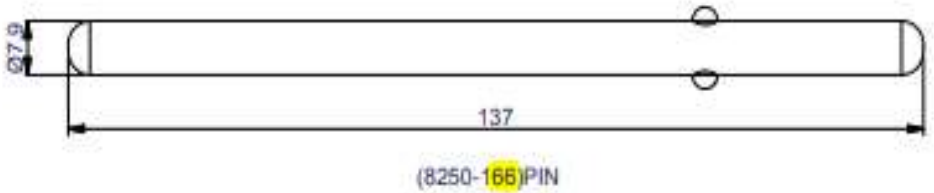

(8250-166)PIN

V2-112017

*Well done!

