# *HLM300B Maintenance



* Customers can put some grease on pivot points(red circle place), with brass or gunmetal bushings.







* Let's maintain your machine!

| 零件代碼 | 品 名 及 圖 案 | 用量 | 備 註 |
| --- | --- | --- | --- |
| 20HLM300B-A1 | 底座<br>國塗0-200S-閃銀<br>國塗KL-0145-透明<br>二塗二烤<br> 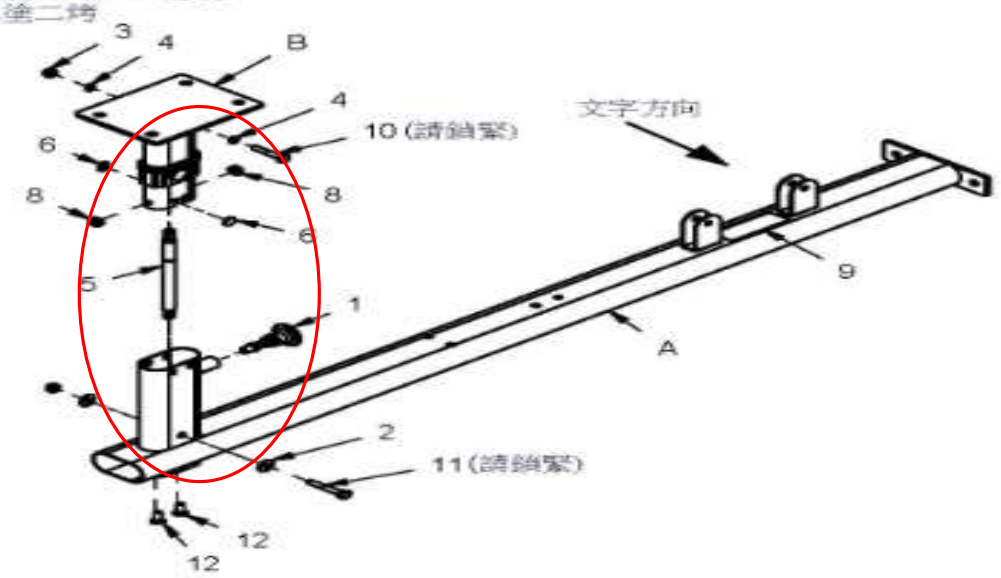 | 1SET | 1.組立8250-066調整組=1PCS<br>2.組立M10華司-27邊=2PCS<br>3.組立M10尼帽=2PCS<br>4.組立M10華司-16邊=2PCS<br>5.組立8830-027氣壓棒=1PCS<br>6.組立9211-036按扣墊=2PCS<br>7.組立9211-107雙層套=1PCS<br>8.組立9211-118按扣墊=2PCS<br>9.貼9440-259注意標籤=1PCS<br>10.組立M10X55L<br>一般外六角螺絲=1PCS<br>11.組立M10X65L<br>一般外六角螺絲=1PCS<br>12.組立M10X25L<br>錐形平頭內六角螺絲=2PCS<br>設變單號<br>2018030003 |
| 20HLM300B-B | 座墊架<br>國塗0-200S-閃銀<br>國塗KL-0145-透明<br>二塗二烤<br> 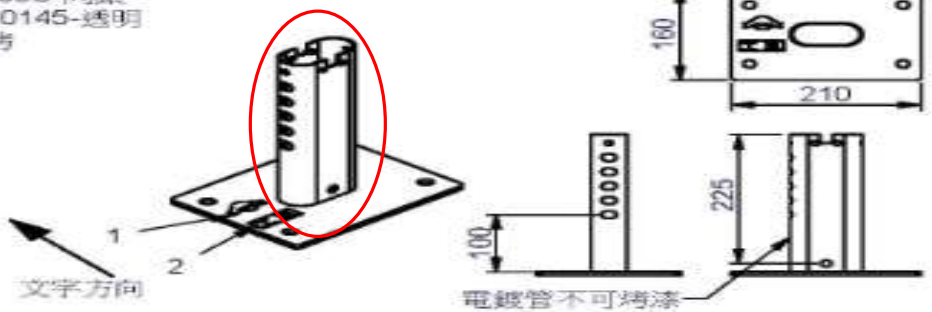 | 1SET | 1.貼9440-055貼紙=1PCS<br>2.貼"工單貼紙"=1PCS |

| 零件代碼 | 品 名 及 圖 案 | 用量 | 備 註 |
| --- | --- | --- | --- |
| 20HLM300B-C<br>中柱<br>國麗0-200S-閃銀<br>國麗KL-0145-透明<br>二途二烤 | 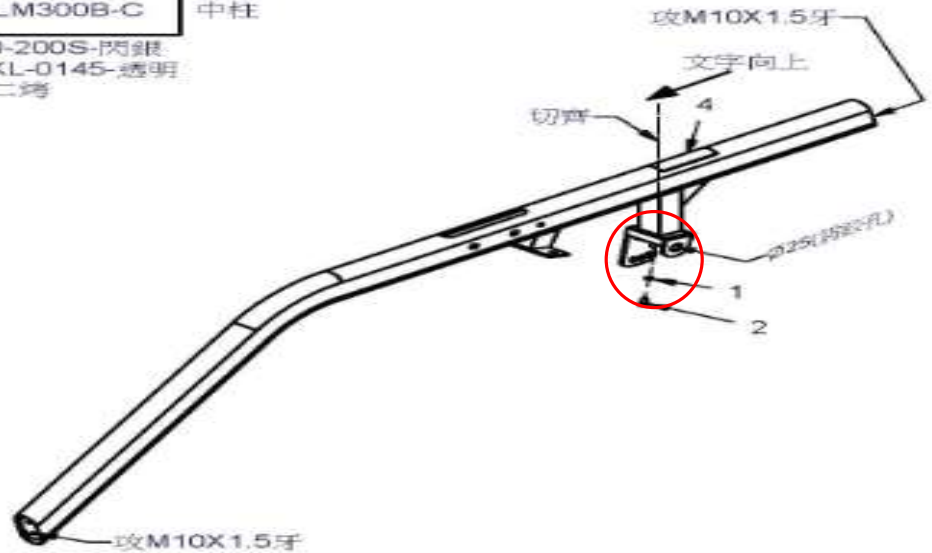 | 1SET | 1.組立M8彈簧華司=1PCS<br>2.組立M8X15L<br>圓頭內六角螺絲CAP=1PCS<br>3.組立9440-258貼紙=1PCS |
| 20HLM300B-D<br>腳架<br>國麗0-200S-閃銀<br>國麗KL-0145-透明<br>二途二烤 | 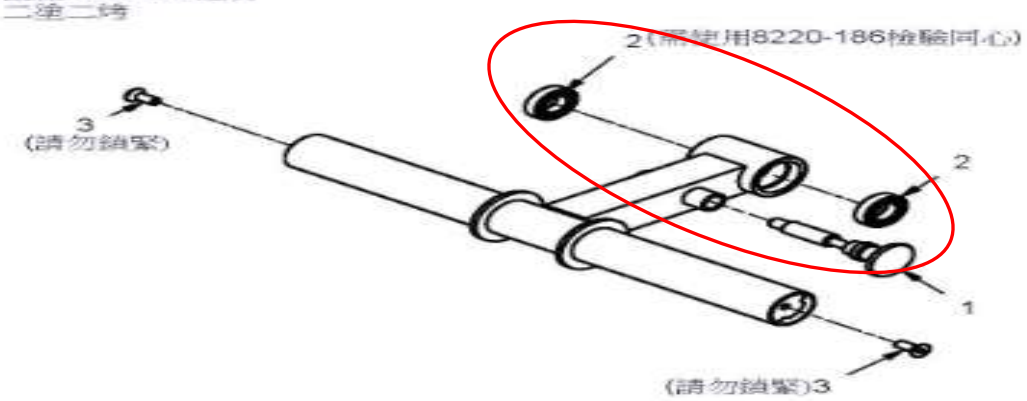 <br>小量產發表會<br>20150311 | 1SET | 1.組立8250-068調整組=1PCS<br>2.組立8510-018軸承=2PCS<br>3.組立M10X25L<br>錐形平頭內六角螺絲=2PCS |

| 零件代碼 | 品名及圖案 | 用量 | 備註 |
|---|---|---|---|
| 20HLM300B-E1 | 上樑<br>國麗0-200S-閃銀<br>國麗KL-0145-透明<br>二塗二烤 | 1SET | 設變單號<br>2018030003 |
| 20HLM300B-F | 雙吊輪座<br>國麗0-200S-閃銀<br>國麗KL-0145-透明<br>二塗二烤 | 1SET | HLHLM300BA內箱 |
| | | | |
| 20HLM300B-H | 腳踏管<br>國麗0-200S-閃銀<br>國麗KL-0145-透明<br>二塗二烤<br>(請勿鎖緊) 4<br>4 (請勿鎖緊)<br>1<br>1<br>2<br>3<br>3<br>2 | 1SET | 1.組立M10華司27邊=2PCS<br>2.組立9162-116<br>高密度把手=2PCS<br>3.組立9211-074香菇塞=2PCS<br>4.組立M10X70L<br>一般外六角螺絲=2PCS |

| 零件代碼 | 品名及圖案 | 用量 | 備註 |
|---|---|---|---|
| 20HLM300B-I<br>280250 | 拉力器<br>國邦790-49153F1HT-深灰 | 1SET | |
| 20LB1200J | 長拉棒<br>國邦790-49153F1HT-深灰<br>(請鎖緊) 4<br>2<br>1<br>3<br>6<br>5<br>4 (請鎖緊)<br>6<br>5<br>554<br>8130-464<br>8130-465<br>國邦790-49153F1HT-深灰 | 1SET | 1.組立8130-464轉環=1PCS<br>2.組立9310-128墊片=1PCS<br>3.組立8130-465鐵套=1PCS<br>4.組立M5X4L沉頭螺絲=2PCS<br>5.組立9211-077管塞=2PCS<br>6.組立9162-174<br>浸漬把手=2PCS<br>設變單號<br>2017050005 |
| 8333-126<br>280251 | L型片<br>國邦790-49153F1HT-深灰<br>前面需平整 | 1PCS | HLHLM300BA內箱 |
| 8343-315 | 弧形片<br>國麗0-200S-閃銀<br>國麗KL-0145-透明<br>二塗二烤<br>R25.5<br>190 | 1PCS | HLHLM300BA內箱 |
| 8343-316 | 弧形片<br>國麗0-200S-閃銀<br>國麗KL-0145-透明<br>二塗二烤<br>R25.5<br>190 | 1PCS | HLHLM300BA內箱 |

| 零件代碼 | 品名及圖案 | 用量 | 備註 |
|---|---|---|---|
| 8220-186 | 轉軸心<br>電鍍<br>1(請勿鎖緊)<br>(請勿鎖緊)<br> 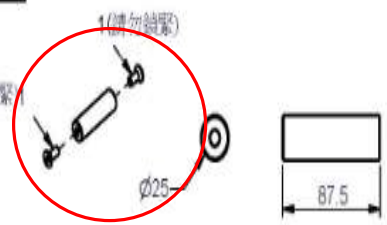 <br> | 1SET | 1.組立M10X25L<br>鉚平頭內六角螺絲=2PCS<br>HLHLM300BA內箱 |
| 8313-189 | 固定片<br>國塗0-200S-閃銀<br>國塗KL-0145-透明<br>二塗二烤<br> 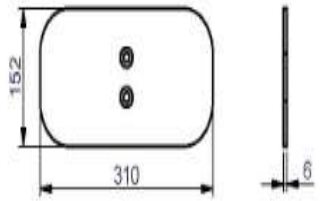 <br> | 1PCS | HLHLM300BA內箱 |
| 23HLM300BA | 附件包 | 1SET | HLHLM300BA內箱 |
| 25HLM300BA | 皮帶輪包 | 1SET | HLHLM300BA內箱 |
| 9420-119 | 動作銘板 | 1PCS | 9630-126氣泡袋x1<br>160X460XB-平口 |
| FHLM300B | 鋼索包 | 1SET | HLHLM300BA內箱 |
| GHLM300BA | 螺絲包 | 1SET | HLHLM300BA內箱 |
| KHLM300B | 說明書 | 1SET | |

| 零件代碼 | 品名及圖案 | 用量 | 備註 |
|---|---|---|---|
| 9121-106 | 座墊<br>黑色耐寒乳膠皮<br> 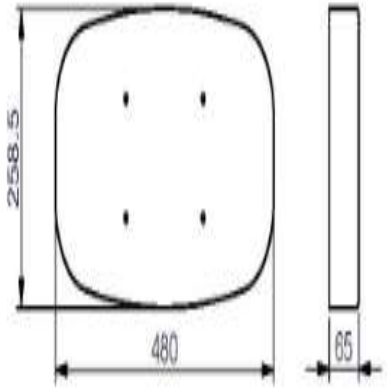 <br> | 1PCS | |
| 9161-078 | 泡棉<br> 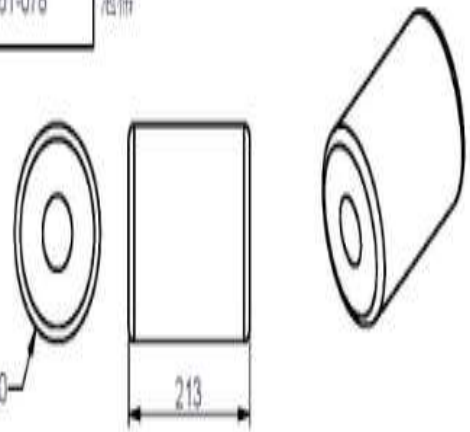 <br> | 2PCS | |

| 零件代碼 | 品 名 及 圖 案 | 用量 | 備 註 |
|---|---|---|---|
| 8380-073 | 護網<br>國麗0-200S閃銀<br>國麗KL-0145-透明<br>二塗二烤<br> 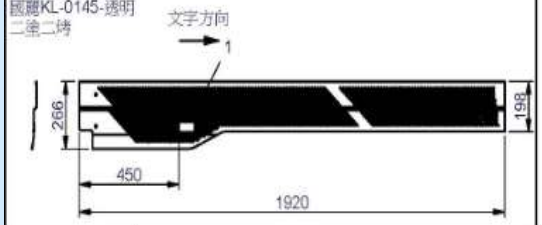 | 1SET | 1.黏貼9440-117<br>防夾手警告標籤=1PCS |
| 8380-074 | 護網<br>國麗0-200S閃銀<br>國麗KL-0145-透明<br>二塗二烤<br> 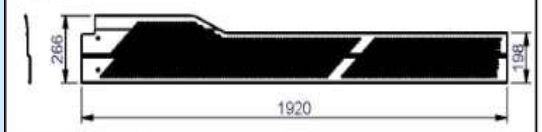 | PCS | 設變單號<br>2017120005 |
| 8400-006A | 選擇上片<br> 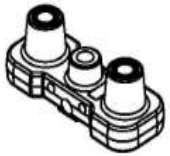 | 1PCS | HLHLM300BC內箱 |
| 8311-194 | 固定片<br>K32027G深灰砂<br> 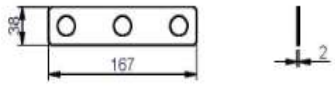 | 1PCS | HLHLM300BC內箱 |
| 8210-191 | 20孔選擇桿<br>電鍍<br> 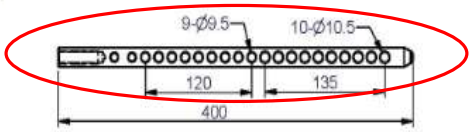 | 1PCS | Ø3/4"x400L |

| 零件代碼 | 品 名 及 圖 案 | 用量 | 備 註 |
|---|---|---|---|
| 6610-017 | 導桿下座<br>國麗0-200S閃銀<br>國麗KL-0145-透明<br>二塗二烤<br> 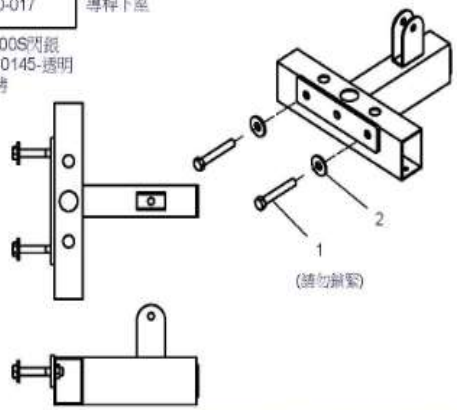 <br>※鎖附螺絲前，請依各螺絲標示規格攻牙 | 1SET | 1.組立M12X80L=2PCS<br>一般外六角螺絲<br>2.組立M12華司Ø34=2PCS<br>HLHLM300BC內箱 |
| 6610-018 | 導桿上座<br>國麗0-200S閃銀<br>國麗KL-0145-透明<br>二塗二烤<br> 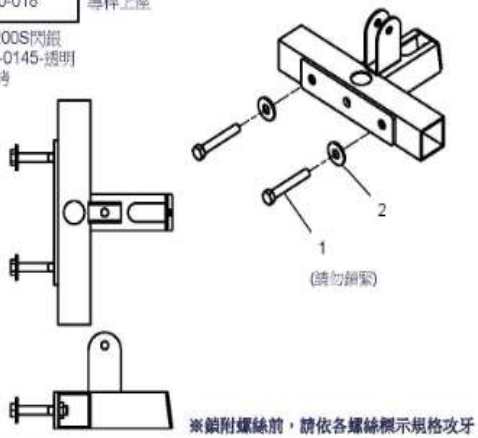 <br>※鎖附螺絲前，請依各螺絲標示規格攻牙 | 1SET | 1.組立M12X80L=2PCS<br>一般外六角螺絲<br>2.組立M12華司Ø34=2PCS<br>HLHLM300BC內箱 |
| 8331-065 | 固定片<br>國麗0-200S閃銀<br> 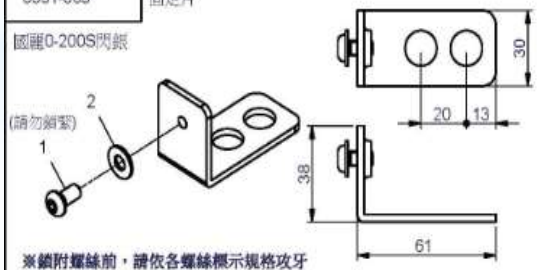 <br>※鎖附螺絲前，請依各螺絲標示規格攻牙 | 4SET | 1.組立M6X12L=4PCS<br>半圓頭內六角螺絲<br>2.組立M6華司Ø13=4PCS<br>HLHLM300BC內箱 |

| 零件代碼 | 品 名 及 圖 案 | 用量 | 備 註 |
|---|---|---|---|
| 8331-064 | 固定片<br>國麗0-200S閃銀<br> 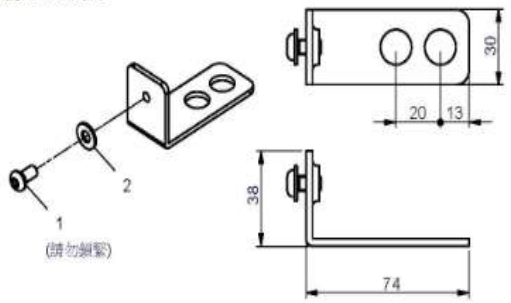 <br>※鎖附螺絲前，請依各螺絲標示規格攻牙 | 6SET | 1.組立M6X12L<br>半圓頭內六角螺絲=6PCS<br>2.組立M6華司Ø13=6PCS<br>HLHLM300BC內箱 |
| 8313-188 | 固定片<br>國麗0-200S閃銀<br>國麗KL-0145-透明<br>二塗二烤<br> 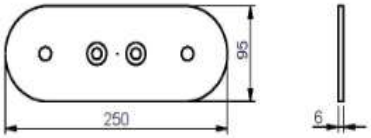 | 2PCS | HLHLM300BC內箱 |
| 8331-017 | 固定片<br>國麗0-200S閃銀<br> 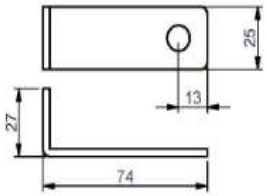 | 1PCS | HLHLM300BC內箱 |
| 8280-038 | 導桿<br> 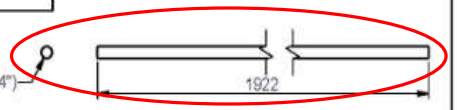 | 2PCS | Ø3/4"X1922L |
| 23HLM300BB | 附件包 | 1SET | HLHLM300BC內箱 |

| 零件代碼 | 品 名 及 圖 案 | 用量 | 備 註 |
|---|---|---|---|
| 6610-035 | 門框<br>國麗0-200S閃銀<br>國麗KL-0145-透明<br>二塗二烤<br> 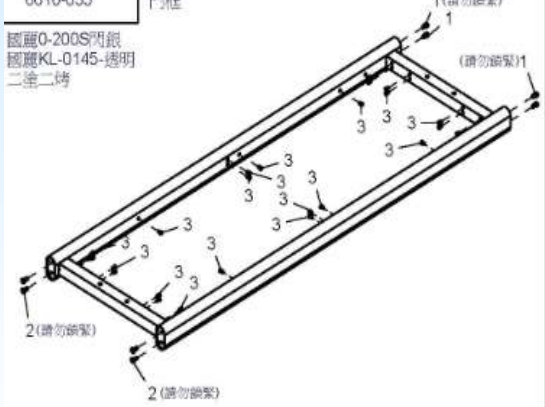 <br>※鎖附螺絲前，請依各螺絲標示規格攻牙 | 1SET | 1.組立M10X15L<br>圓頭內六角螺絲CAP=4PCS<br>2.組立M10X25L<br>鉚形平頭內六角螺絲=4PCS<br>3.組立M6<br>拉帽(身體有花)=26PCS |
| 9211170-023 | 上蓋<br>酒紅色<br> 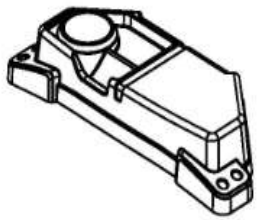 | 1PCS | H9211170-023內箱 |
| 8380-072 | 護網<br>國麗0-200S閃銀<br>國麗KL-0145-透明<br>二塗二烤<br> 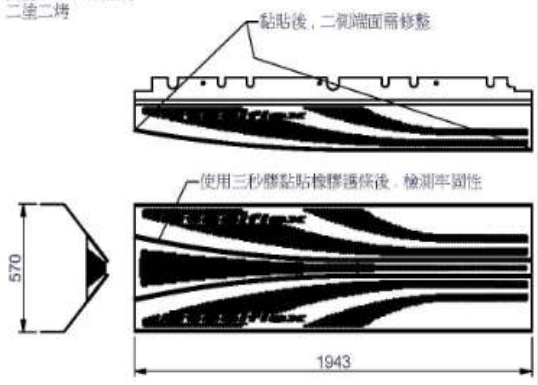 | 1SET | 1.黏貼9310105-028飾條=2PCS<br>Ø5.5X2tX1950L |

| 零件代碼 | 品 名 及 圖 案 | 用量 | 備 註 |
| --- | --- | --- | --- |
| 25HLM300BB | 皮帶輪包 | 1SET | HLHLM300BC內箱 |
| GHLM300BB | 螺絲包 | 1SET | HLHLM300BC內箱 |
| 8345-014<br>固定板 | 鍍鋅<br> 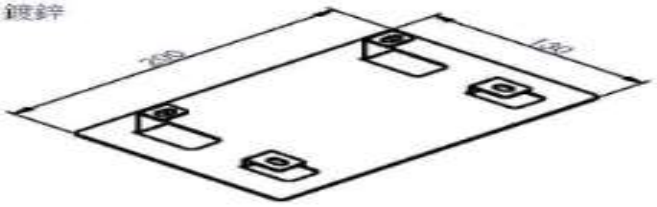 | 1PCS | HLHLM300BC內箱 |
| 門框包裝示意圖 | | | 1.組立9700-074棧板=3PCS<br>2.M5X20L十字鐵板牙=18PCS<br>3.M5華司Ø14=18PCS |

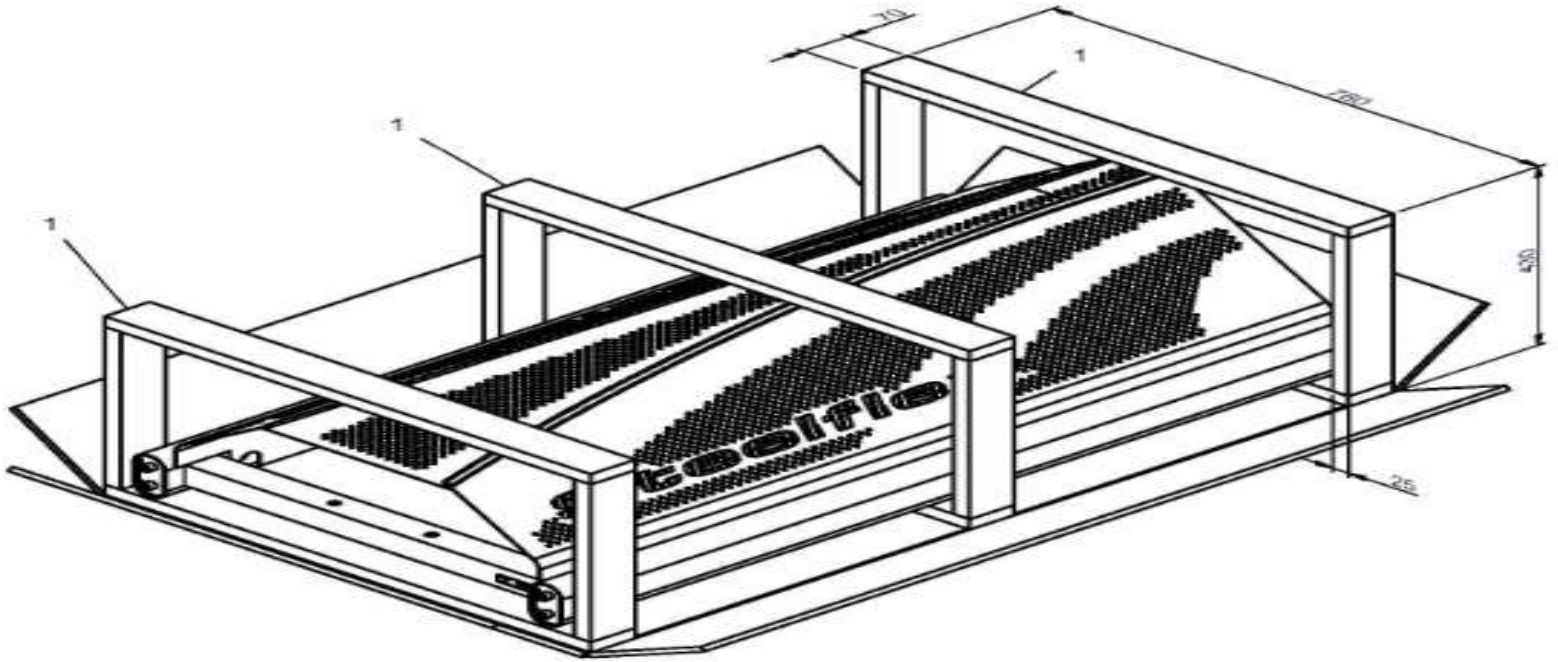

# HLM-300B ASSEMBLY INSTRUCTIONS

## HARDWARE ILLUSTRATION

D2.Ø60 CAP COVER(8130-231)----------[2PCS]
D3.Ø75 CAP COVER(8130-236)----------[2PCS]
D4.Ø1"X70L STEEL BUSHING (8220-244)----------[1PCS]
D5.Ø1" CU WASHER (8520-008)----------[2PCS]
D6. Ø10XØ16X16.5L Steel Bushing (8530-009)----------[4PCS]

D8.Ø8 SPRING SNAP LINK(8810-005)----------[2PCS]
D9.50X100X2T END CAP(9211-114)----------[2PCS]
D10.PLATE CAP (9211-173)----------[8PCS]
D11. Ø120XØ51X3T Nylon Washer (9214-039)----------[4PCS]
D12.Ø3/4"XØ13.5X38L STEEL BUSHING (8110-147)----------[2PCS]
D13.290X5TX132L RUBBER PAD(9310-061)----------[1PCS]

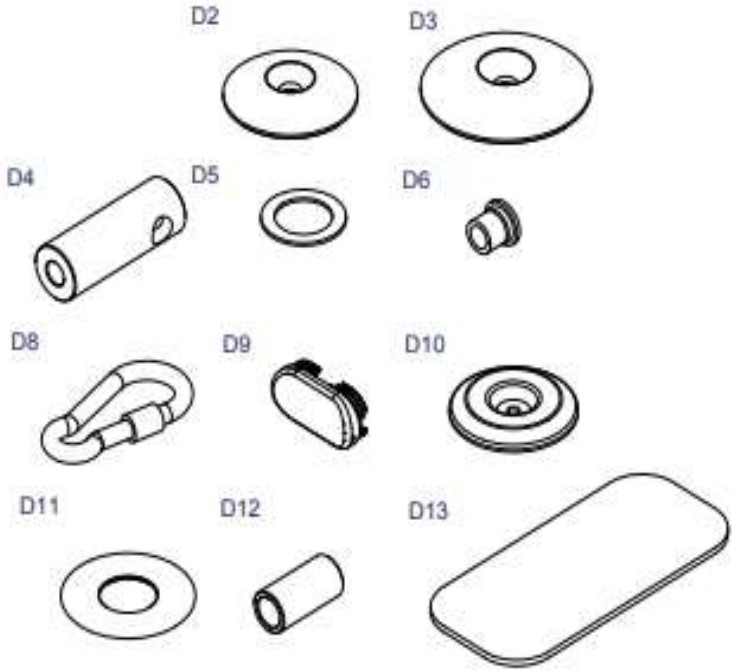


# HLM-300B ASSEMBLY INSTRUCTIONS

## HARDWARE ILLUSTRATION

D14.4115mm STEEL CABLE(FHLM300BA1)----------[1PCS]
D15.5785mm STEEL CABLE(FHLM300BB1)----------[1PCS]
D16.Ø110 PULLEY(9213-002B)----------[6PCS]
D17.Ø117 PULLEY(9213-010E)----------[1PCS]
D18.Ø94 PULLEY(9213-052B)----------[2PCS]
D19.EXERCISE CHART (9420-119)----------[1PCS]

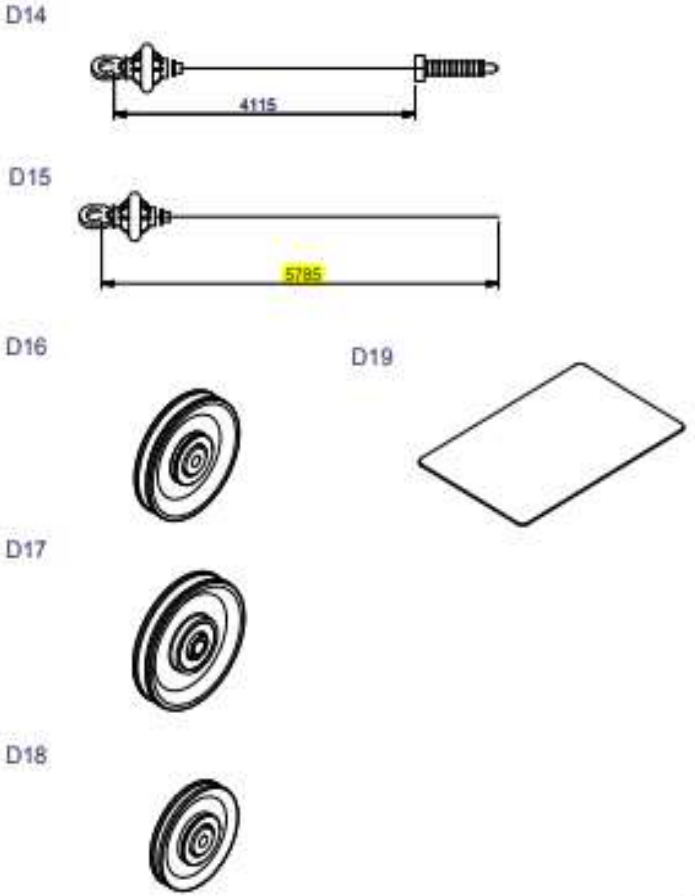

# HLM-300B ASSEMBLY INSTRUCTIONS

## FRAME HARDWARE ILLUSTRATION FOR DOOR

D20.3/4" SHAFT COLLAR(9211-046)----------[2PCS]
D21.2"x2" Rubber Cane Cap(9214-002)----------[3PCS]
D22.TOWEL RACK(9215-024)----------[1PCS]
D23.Ø65XØ20X70L Rubber Dount(9310-049)----------[2PCS]
D24.108X14.5TX263T RUBBER PAD(9310-075)----------[2PCS]
D25.Ø110 PULLEY(9213-002B)----------[2PCS]
D26.TOP PLATE(8400-006)----------[1PCS]
D27.Selector Rod(8210-191)----------[1PCS]

D20



D21



D22



D23



D24



D25



D26

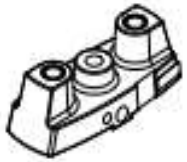

D27



# HLM-300B ASSEMBLY INSTRUCTIONS

## PARTS ILLUSTRATION SHEET

A1[1PCS]

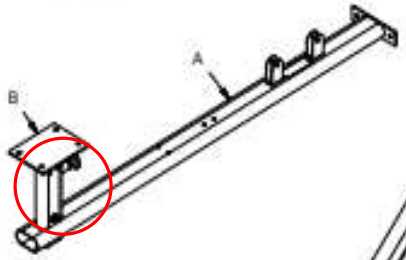


C[1PCS]

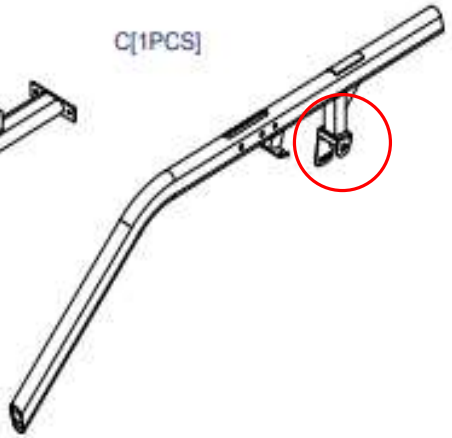

D[1PCS]

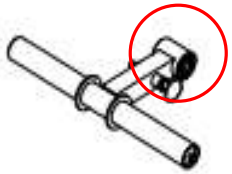

E1[1PCS]

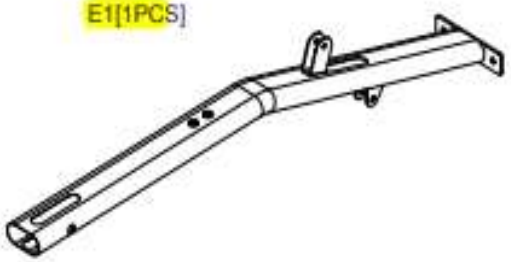

F[1PCS]



H[1PCS]

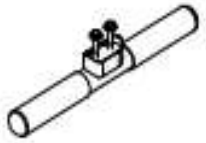

# HLM-300B ASSEMBLY INSTRUCTIONS

## PARTS ILLUSTRATION SHEET

I[1PCS]
280250



J1[1PCS]
20LB1200J



K[1PCS]
280251



L[1PCS]
8343-315



M[1PCS].
8343-316



N[1PCS]
8220-186




O[1PCS]
8313-189

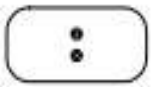

P[1PCS]
9121-106



Q1[2PCS]
9161-078



# HLM-300B ASSEMBLY INSTRUCTIONS

## FRAME PARTS ILLUSTRATION SHEET FOR DOOR

AA[1PCS]
6610-035



AB[1PCS]
9211170-023



AC[1PCS]
8380-072



AD[1PCS]
8380-073



AE[1PCS]
8380-074



AF[1PCS]
6610-017



# HLM-300B ASSEMBLY INSTRUCTIONS

## FRAME PARTS ILLUSTRATION SHEET FOR DOOR

AG[1PCS]
6610-018



AH[4PCS]
8331-065

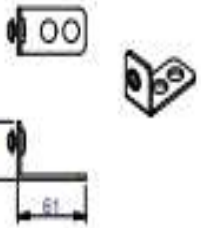


AI[6PCS]
8331-064

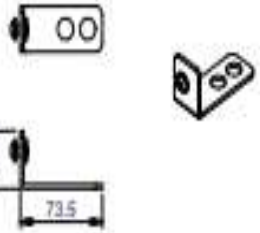


AJ[2PCS]
8313-188



AK[1PCS]
8331-017

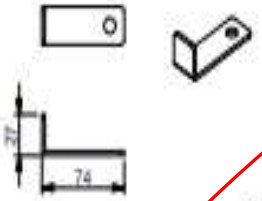


AL[2PCS]
8280-038
Ø3/4"X1922L



AM[1PCS]
8345-014

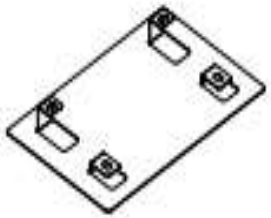

AN[1PCS]
8311-19



# HLM-300B ASSEMBLY INSTRUCTIONS



Above shows STEP 1
assembled and completed

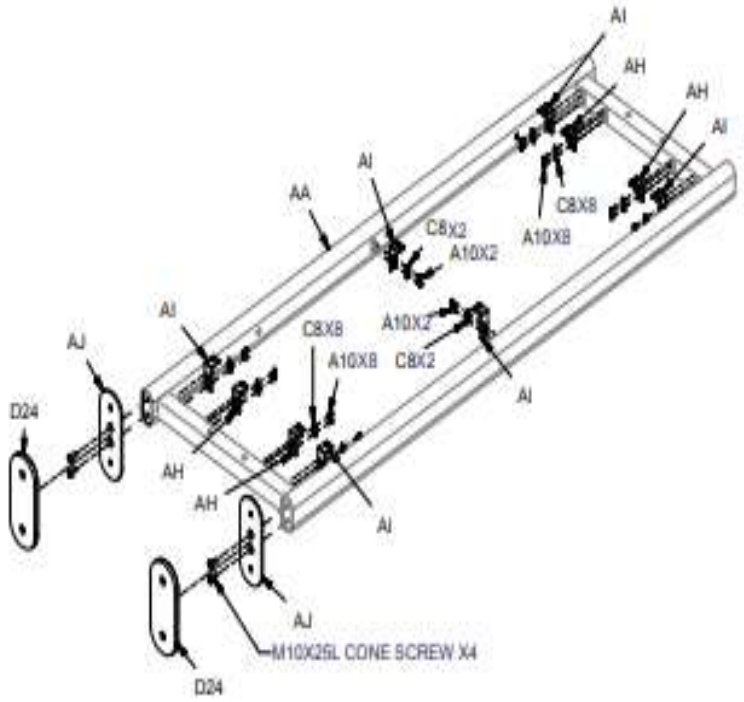

# HLM-300B ASSEMBLY INSTRUCTIONS

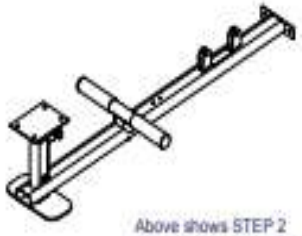

Above shows STEP 2 assembled and completed

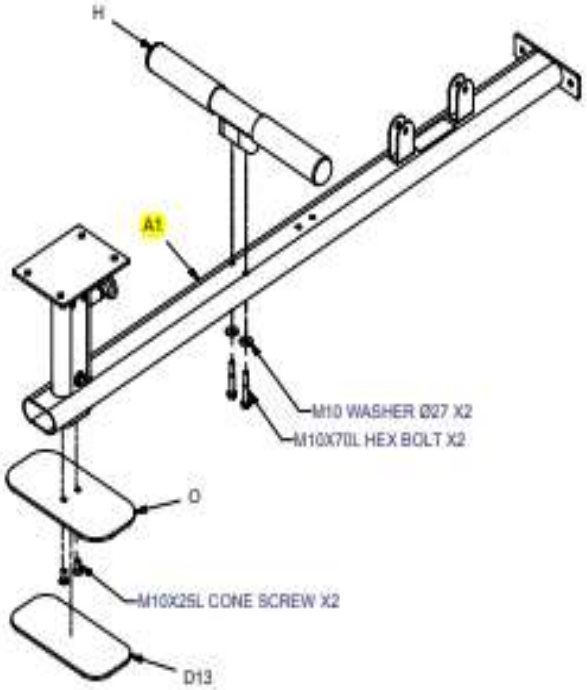


# HLM-300B ASSEMBLY INSTRUCTIONS



Above shows STEP 3 assembled and completed

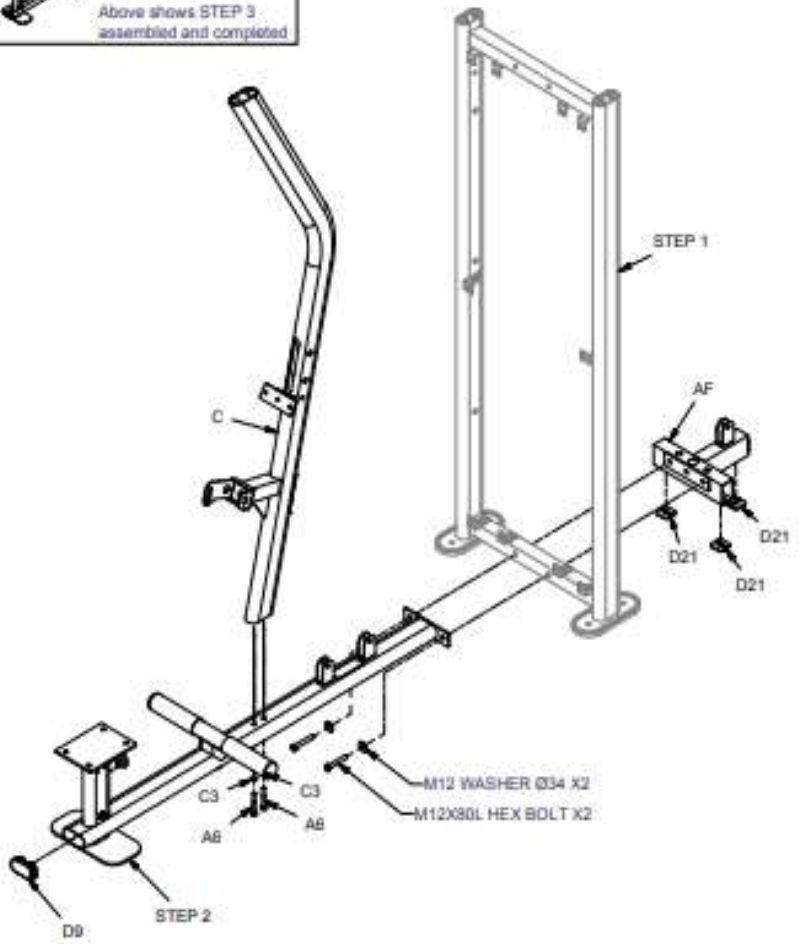

# HLM-300B ASSEMBLY INSTRUCTIONS



Above shows STEP 4 assembled and completed

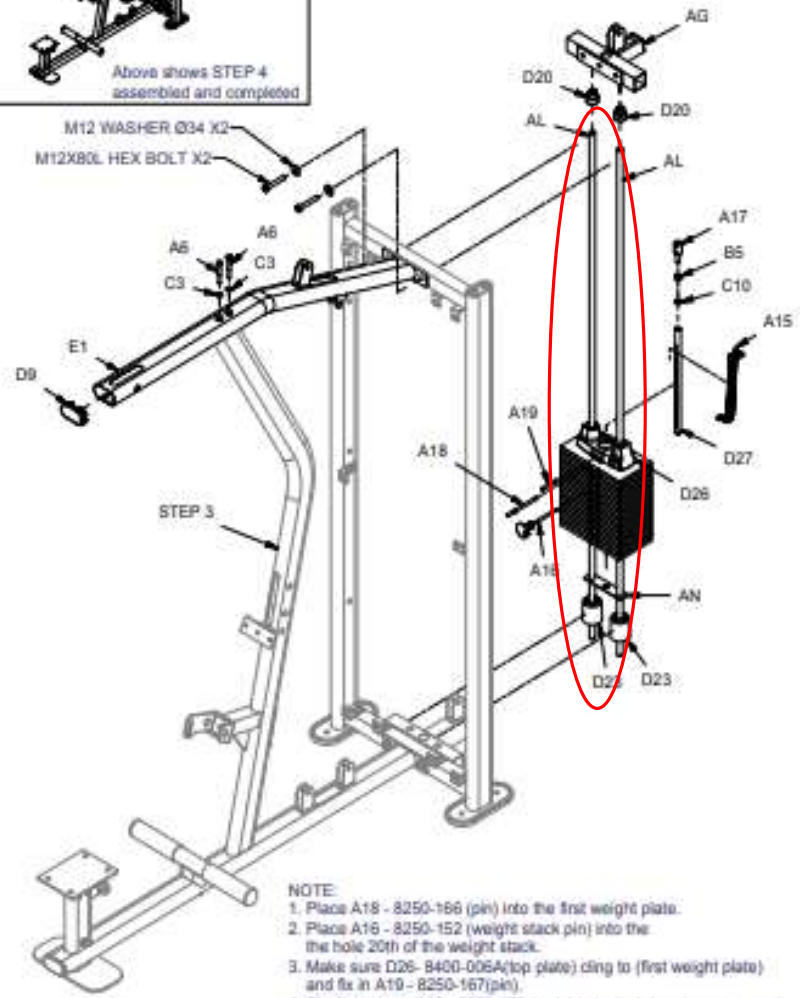


NOTE:
1. Place A18 - 8250-166 (pin) into the first weight plate.
2. Place A16 - 8250-152 (weight stack pin) into the the hole 20th of the weight stack.
3. Make sure D26- 8400-006A(top plate) cling to (first weight plate) and fix in A19 - 8250-167(pin).
4. Finally remove A16 - 8250-152 (weight stack pin) and use as usual.

# HLM-300B ASSEMBLY INSTRUCTIONS



Above shows STEP 5 assembled and completed

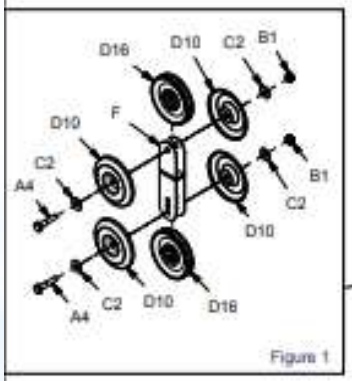


Figure 1

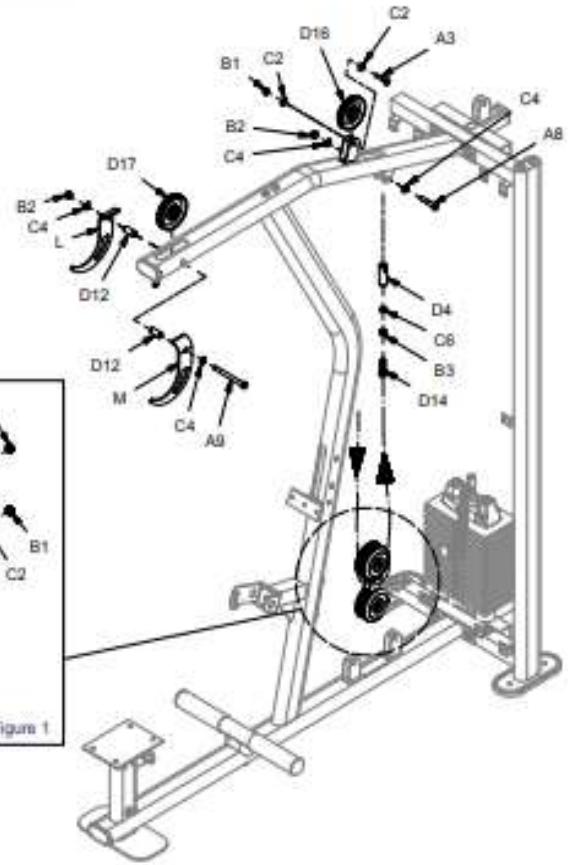

# HLM-300B ASSEMBLY INSTRUCTIONS

Cable to constitute illustration

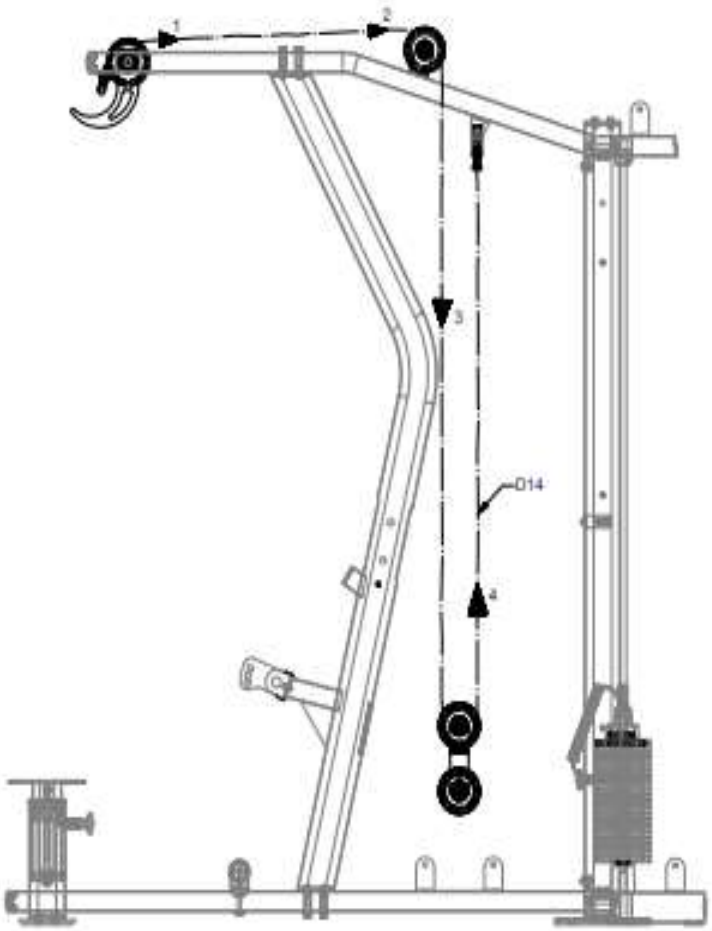


# HLM-300B ASSEMBLY INSTRUCTIONS



Above shows STEP 6 assembled and completed

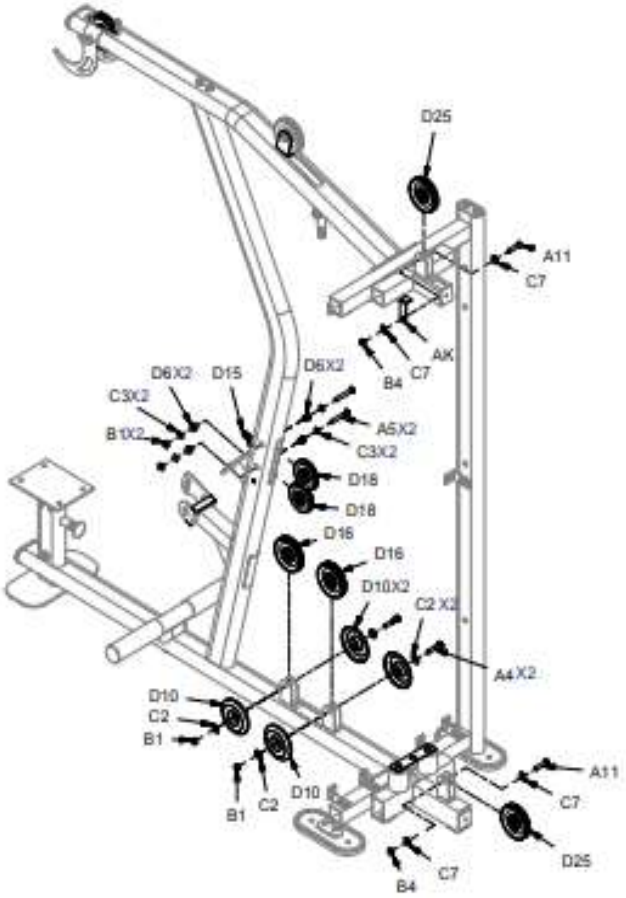

# HLM-300B ASSEMBLY INSTRUCTIONS

Cable to match illustration

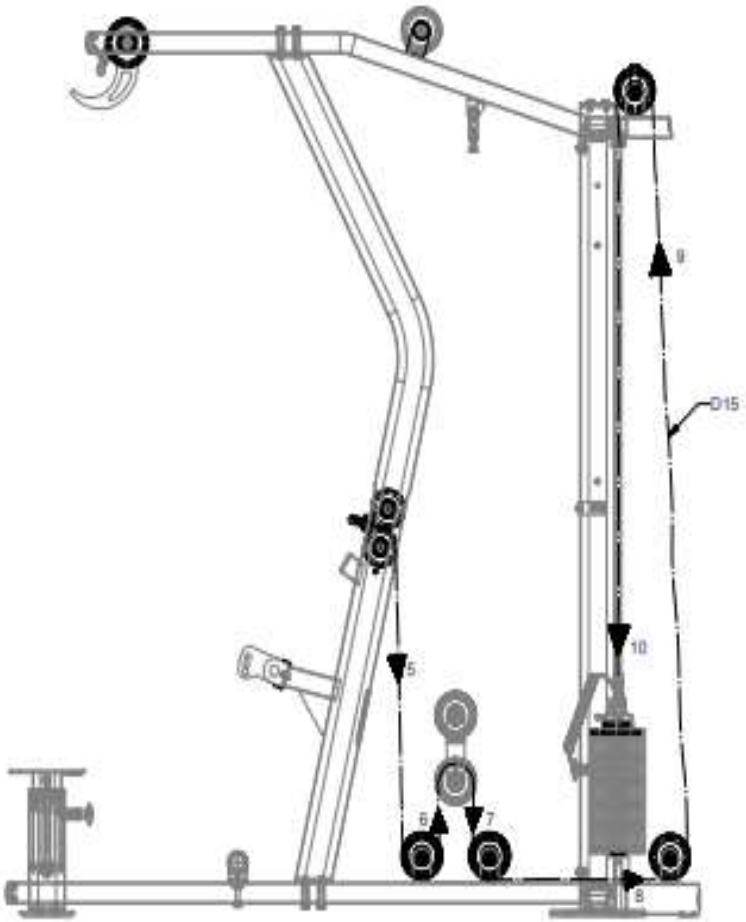


# HLM-300B ASSEMBLY INSTRUCTIONS



Above shows STEP 7 assembled and completed

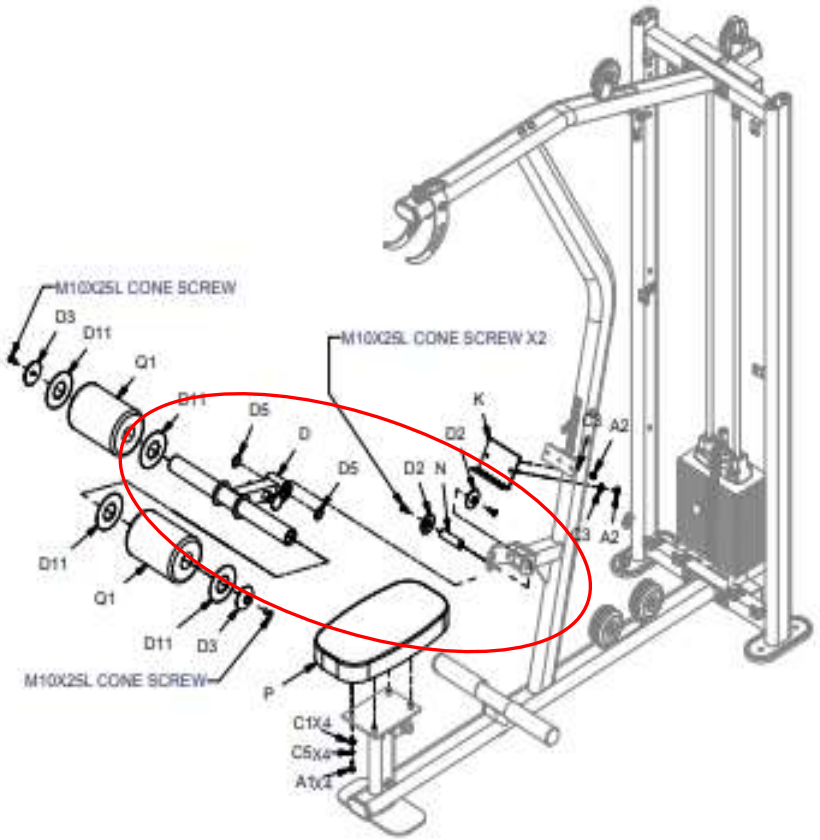

# HLM-300B ASSEMBLY INSTRUCTIONS



Above shows STEP 8 assembled and completed

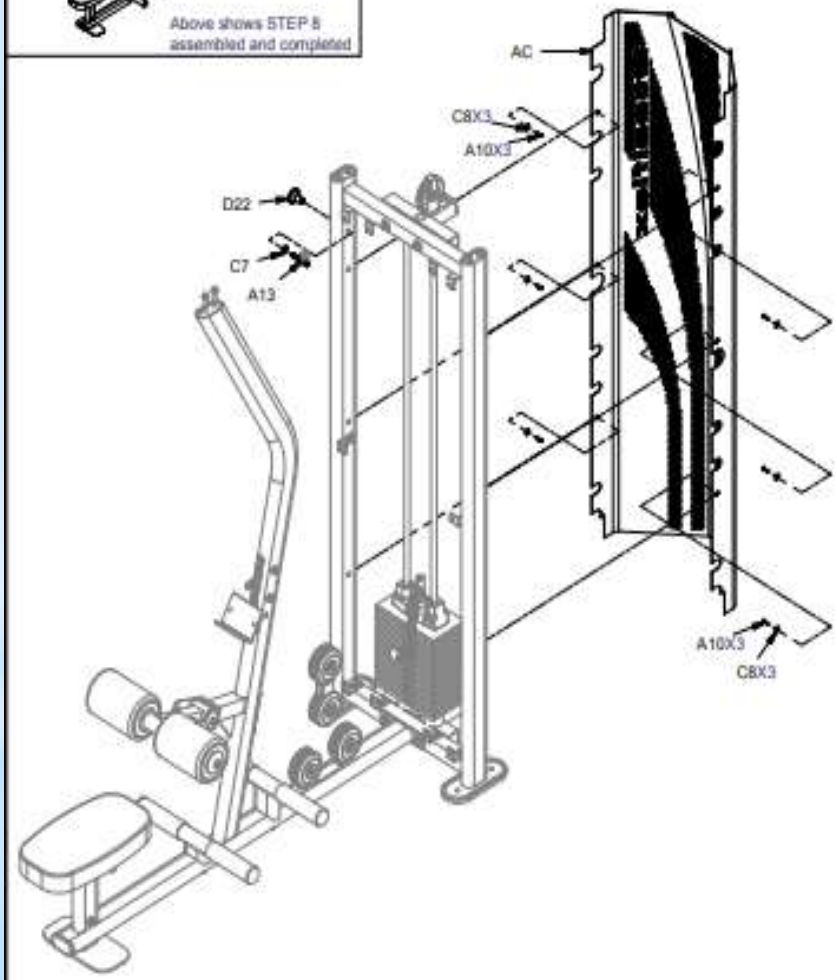


HLM-300B ASSEMBLY INSTRUCTIONS



Above shows STEP 9 assembled and completed

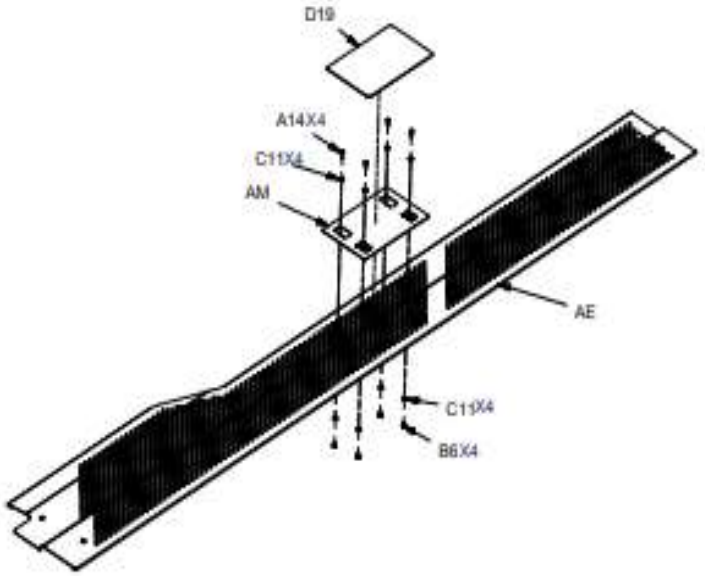

# HLM-300B ASSEMBLY INSTRUCTIONS



Above shows STEP 10
assembled and completed

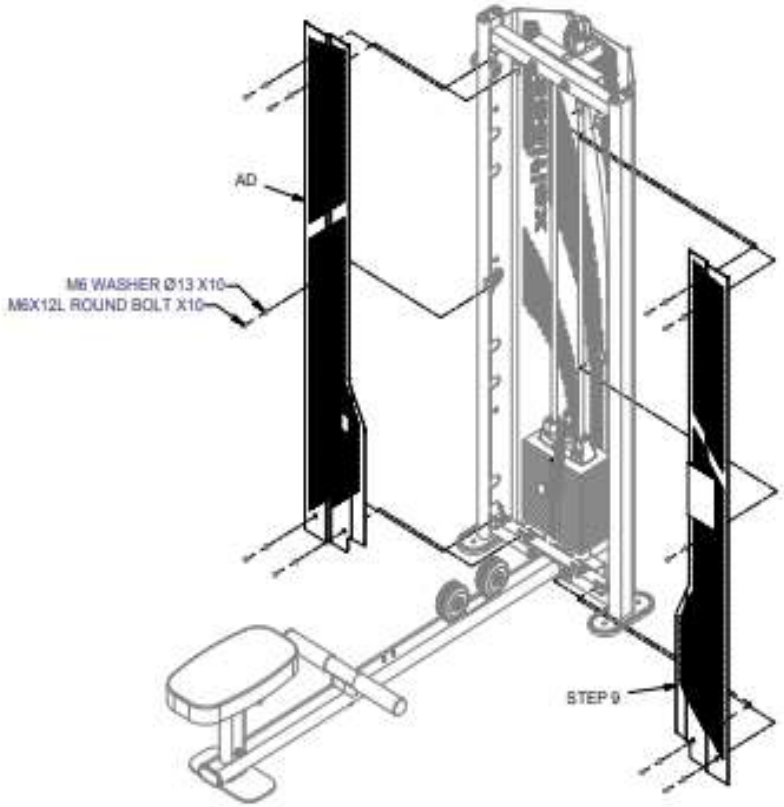


# HLM-300B ASSEMBLY INSTRUCTIONS



Above shows STEP 11
assembled and completed

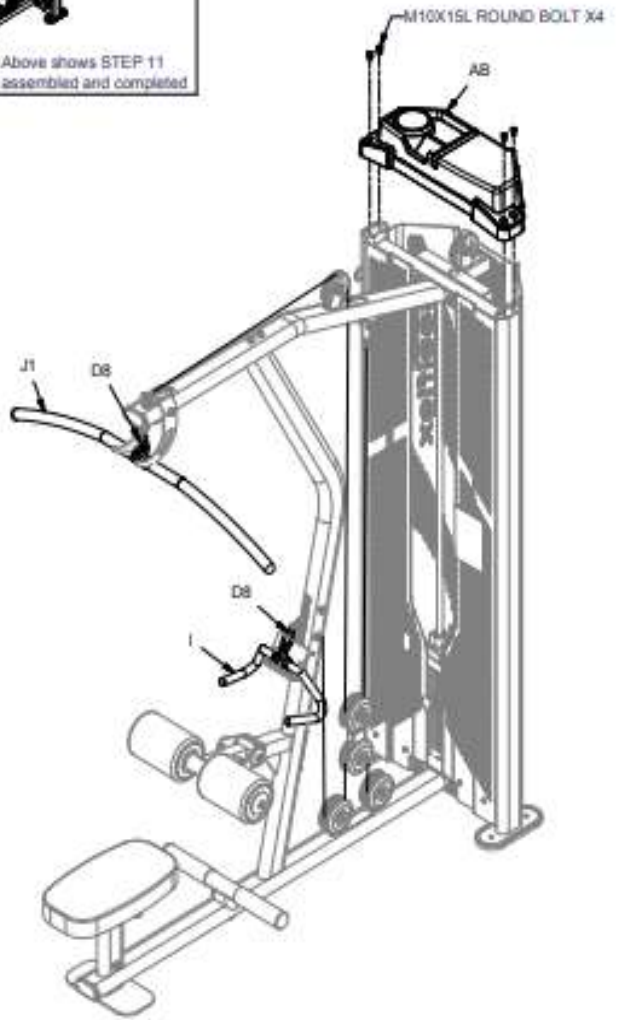

# HOPE ASSEMBLY INSTRUCTIONS

## DECAL REFERENCE




9440-258



9440-259




9440-047

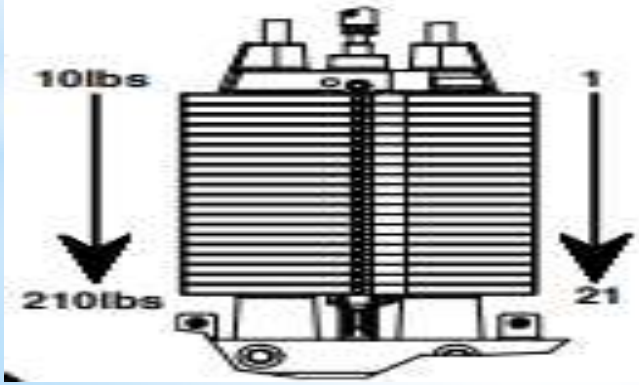





9440-117

# *Well done!

